MrCool
"World Class Quality"

ENGINEERING
TOMORROW

Danfoss

Application guidelines

Danfoss scroll compressors
In parallel installation
SM/SY/SZ

http://cc.danfoss.com

Content

Compressor model designation

Danfoss scroll compressors are available both as single compressors and as tandem units. The example below presents the single compressor nomenclature which equals the technical reference as shown on the compressor nameplate.

Code numbers for ordering list are in section "Ordering information & packaging".

For tandem and trio assemblies, please refer to the Danfoss Parallel Application Guidelines documentation FRCC.PC.005.

Nomenclature

Family, lubricant & refrigerant	Nominal capacity		Voltage	Version	Evolution index	
SZ	**185**	**-**	**4**	**R**	**C**	Single compressors
SY	**300**	**A**	**7**	**CA**	**A**	Single compressors

Family, lubricant & refrigerant
SM: Scroll, Mineral oil, R22/R417A*
SY: Scroll, POE lubricant, R22/R417A/ R407C/R134a/R513A**
SZ: Scroll, POE lubricant, R407C - R134a (R404A, R507A for SZ084 to SZ185, R513A for SZ148 to SZ185 **)

Nominal capacity
in thousand Btu/h at 60 Hz, R22, ARI conditions

Motor voltage code
3: 200-230V/3~/60 Hz
4: 380-400V/3~/50 Hz - 460V/3~/60 Hz
SY380: 380-415V/3~/50 Hz - 460V/3~/60 Hz
6: 230V/3~/50 Hz
7: 500V/3~/50 Hz - 575V/3~/60 Hz
9: 380V/3~/60 Hz
SY380: 380-400V/3~/60 Hz

Motor protection type		Connection	Module voltage	Applies to
Internal overload protector	**V**	: brazed		S 084-090-100-110-120-148-161
	A	: brazed		S 112-124-147
Internal thermostat	**C**	: brazed		S175-185
	R	: rotolock		
Electronic protection module	**P**	: brazed	24V AC	S 185
	X	: brazed	110-240V	
	Y	: rotolock	110-240V	
	CA	**C**: brazed	**A**: 24V AC	S 240 - 300
	CB		**B**: 110-240V	
	PA	**P**: rotolock	**A**: 24V AC	
	PB		**B**: 110-240V	
	CA	**C**: brazed	**A**: 24V AC	S 380
	CB		**B**: 110-240V	

* When SM compressors are used with R417A, the factory charged mineral oil 160P must be replaced by polyolester oil 160SZ
** Only motor voltage 4 are qualified with R513A

Benefits

A parallel compressor installation refers to a system of interconnected compressors with a common suction line and common discharge line. The technique of mounting compressors in parallel, also called manifolding, has several benefits.

The main reason is reduced operating cost through greater control of capacity and power consumption. This is achieved by staggering compressor switch-on sequences that allow the parallel system to match its power with the capacity needed.

A second reason for manifolding is improved part load efficiency. In a parallel installation the individual compressor(s) can be switched off while the other compressor(s) keep operating at 100% load. Therefore the part load efficiency is very near the full load efficiency. Conventional fixed speed compressor unloading methods impose a serious penalty for part load efficiency, mainly at low load operation.

Third, working with parallel systems allows for standardisation of compressors. As an example, the capacity range 10, 15, 20, 25 and 30 Tons can be covered with 5 individual compressors. But the same needs can be covered with only a 10 Tons and a 15 Tons model mounted in parallel, thus reducing the number of different compressors from 5 to 2.

Scope

These application guidelines describe the operating characteristics, design features, and application requirements for the Performer scroll compressor (SM, SY, SZ) in air conditioning and heat pump applications. The guidelines are not valid for refrigeration applications, which require dedicated compressors and more specific installations precautions.

To ensure proper parallel installation and running conditions, the following recommendations must be followed.

It is essential to respect all instructions given in these guidelines, the instruction leaflet delivered with each compressor, and the Application Guidelines for single compressors (FRCC.PC.003).
For additional system components related to specific application requirements, the supplier recommendations must always be respected.

Design challenge

Parallel systems have to ensure correct compressor operation, oil management and reliability, which requires evaluation and testing.

Oil equalisation

Suction gas in a hermetic compressor flows via the oil sump which makes it difficult to maintain equal pressure in the sumps of parallel compressors. Since oil equalisation usually depends on equal sump pressures this is a point of special attention. Danfoss Commercial Compressors has developed
specially adapted oil equalisation systems which ensure proper oil balancing between the compressors but it is always recommended to carry out some tests to validate it in the systems (cf. specific test recommendation).

Interconnecting piping design

This is an area where Danfoss Commercial Compressors can use its research and testing capabilities to the users benefits. All factory designed parallel systems pass the critical 500 hours run test to qualify the piping configuration. This is not easily achieved with "field" erected systems which are often affected by infancy problems such as pipe vibrations, noise or ultimately pipe ruptures.

Using factory designed and tested parallel systems guarantees predictable reliability.

Compressor sequence

The operating sequence should be arranged in such way that the running time of the compressors is equalized as much as possible. It will be explained later in these guidelines how this can be achieved with a system of two compressors and why a fixed sequence of loading and unloading may be required in trio and quadro systems with 3 or 4 Danfoss scroll compressors.

Cycling

As a part of the design and development process at Danfoss Commercial Compressors it is verified that oil management and piping resistance meet engineering specifications at any cycling frequency.

The system must be designed in a way that guarantees a minimum compressor running time of 2 minutes to provide sufficient motor cooling after its start and a proper oil return. Note that the oil return may vary as it is a function of the system design.

Cost effectiveness and serviceability

In today's business climate, machine simplicity and low cost are main requirements. Danfoss scroll tandem, trio and quadro configurations are compact designs but they ensure easy maintenance and service because refrigeration circuit connections, oil change, compressor wiring and compressor replacement are taken into account from the earliest design stage.

Application envelope

The domain of application, the types of refrigerant are evaluated to meet the requirements of the intended applications.

Oil return

There is one last challenge which falls under the responsibility of the system designers and end users; proper oil return from the circuit.

Whatever the design of the parallel compressor system, good oil return from the circuit is prerequisite for the success of the equipment.

As mentioned before, one of the challenges of manifolding is oil management.

To ensure suitable oil distribution, different systems can be used.

Static systems

This is one of the most simple, and cheapest ways of manifolding compressors. Compressor sumps and low pressure shells are interconnected. A small interconnecting pipe, on the lower part of the compressor (below the oil level), ensures oil balancing. The suction header design is critical, as it ensures a pressure drop balancing and equal distribution of oil returning from the system when all compressors are running.

The success of such a system relies very much on the sizing of the pipe work, small differences in sump pressure can result in significant oil level variations.

This system is limited to three compressors in parallel, and needs perfect suction tube balancing.

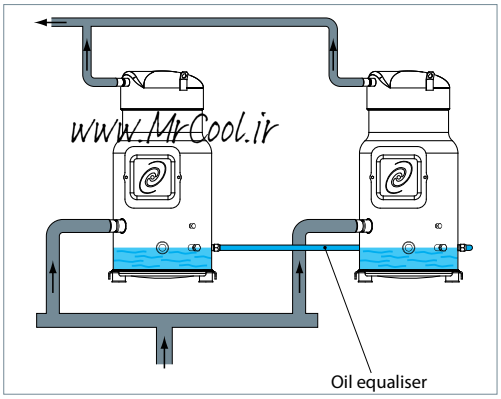

Dynamic systems

The dynamic system provides truly positive oil management, uniting the advantages of both a mechanical and a static system, i.e. flexible oil management allowing a large number of compressors, simplicity and cost effectiveness.

The suction connections of the two individual compressors are interconnected by a suction oil separator / gas restrictor (suction Tee). The compressor which appears first on the suction line is called the "upstream compressor" while the second one will be referred to as the "downstream compressor".

The oil which clings back along the main suction line is separated by the suction Tee which returns 80 to 100% of the oil in the suction gas to the upstream compressor. The Tee creates a slight pressure drop in the suction line of the downstream compressor, which therefore has a slightly lower sump pressure. The pressure drop should be between 15 and 150 mbar at any condition. Driven by the sump pressure difference, the excess oil from the upstream compressor runs into the downstream compressor sump. To avoid the migration of the normal oil charge from one compressor to the other, the oil equalisation line protrudes into each compressor shell, thereby ensuring a real overflow function. Suitable oil management, with no mechanical components or pressure equalisation line is created. This system allows up to four compressors in parallel with minimum costs. The active components in this oil balancing system are calibrated and qualified by Danfoss Commercial Compressors.

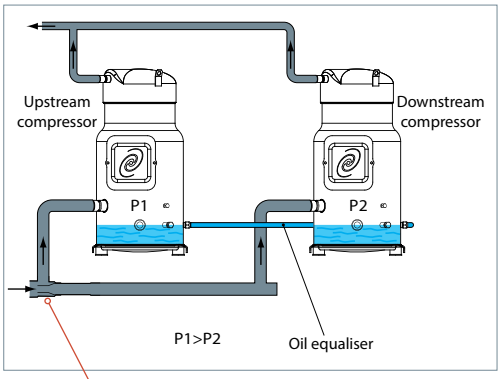

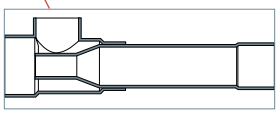

Suction oil separator / gas restrictor

By default, tandems, trios and quadros are not factory-built. To complete an assembly in the field, you will need:

- Tubings, according to specific outline drawings indicated in the following sections.
- Manifolding accessory kit.
- Compressors.

Model		Composition	R22	R404A/ R507A	R407C	R134a	R513A	Oil management
Tandem	SM/SZ170	SM/SZ084 + SM/SZ084	○	○	○	○	-	Dynamic
	SM/SZ180	SM/SZ090 + SM/SZ090	○	○	○	○	-	Dynamic
	SM/SZ200	SM/SZ100 + SM/SZ100	○	○	○	○	-	Dynamic
	SM/SZ220	SM/SZ110 + SM/SZ110	○	○	○	○	-	Dynamic
	SM/SZ242	SM/SZ120 + SM/SZ120	○	○	○	○	-	Dynamic
	SM248	SM124 + SM124	○				-	Static
	SM/SZ268	SM/SZ120 + SM/SZ148	○	○	○	○	-	Dynamic
	SM/SZ271	SM/SZ110 + SM/SZ161	○	○	○	○	-	Dynamic
	SM272	SM124 + SM147	○	-	-	-	-	Static
	SM/SZ281	SM/SZ120 + SM/SZ161	○	○	○	○	-	Dynamic
	SM294	SM147 + SM147	○	-	-	-	-	Static
	SM/SZ296	SM/SZ148 + SM/SZ148	○	○	○	○	-	Dynamic
	SM/SZ322	SM/SZ161 + SM/SZ161	○	○	○	○	-	Dynamic
	SM/SZ350	SM/SZ175 + SM/SZ175	○	○	○	○	-	Dynamic
	SY/SZ370	SY/SZ185 + SY/SZ185	○	○	○	○	-	Dynamic
	SY425	SY240 + SY185	○	-	○	○	-	Dynamic
	SY482	SY240 + SY240	○	-	○	○	○	Static
	SY485	SY300 + SY185	○	-	○	○	-	Dynamic
	SY540	SY300 + SY240	○	-	○	○	○	Static
	SY600	SY300 + SY300	○	-	○	○	○	Static
	SY620	SY240 + SY380	○	-	○	○	○	Static
	SY680	SY300 + SY380	○	-	○	○	○	Static
	SY760	SY380 + SY380	○	-	○	○	○	Static
Trio	SM/SZ444	3 x SM/SZ148	○	○	○	○	-	Static
	SM/SZ483	3 x SM/SZ161	○	○	○	○	-	Static
	SY/SZ550	3 x SY/SZ185	○	○	○	○	-	Dynamic
	SY720	3 x SY240	○	-	○	○	○	Static
	SY900	3 x SY300	○	-	○	○	○	Static
	SY1140	3 x SY380	○	-	○	○	○	Static
Quadro	SM/SZ740	4 x SY/SZ185	○	○	○	○	-	Dynamic

○: Field assembly - : Not available

Model			Nominal tons 60 Hz	Nominal cooling capacity		Power input	Efficiency		Sound power	Swept volume	Displacement
			TR	W	Btu/h	kW	COP W/W	E.E.R. Btu/h/W	dB(A)	cm^3/ rev	m^3/h
R22	Tandem	SM170	13.5	40 100	136 900	12.2	3.28	11.2	73.0	229.0	39.8
		SM180	15	42 900	146 400	13.1	3.28	11.2	73.0	241.0	41.9
		SM200	16	45 600	155 600	13.9	3.28	11.2	73.0	254.4	44.3
		SM220	18	51 100	174 400	15.6	3.27	11.2	78.0	288.4	50.2
		SM242	20	59 300	202 400	17.9	3.31	11.3	78.0	333.2	58.0
		SM248	20	62 300	212 600	17.5	3.56	12.2	76.0	339.0	59.0
		SM268	22	65 200	222 500	19.8	3.29	11.2	80.5	365.6	63.6
		SM271	22	64 000	218 400	19.4	3.30	11.3	80.8	360.8	62.8
		SM272	22	67 200	229 400	18.8	3.57	12.2	76.5	363.0	63.2
		SM281	23	68 100	232 400	20.5	3.31	11.3	80.8	383.2	66.7
		SM294	24	72 100	246 100	20.2	3.58	12.2	77.0	387.0	67.3
		SM296	24	71 100	242 700	21.6	3.29	11.2	82.0	398.0	69.3
		SM322	26	76 900	262 500	23.2	3.32	11.3	82.5	433.2	75.4
		SM350	28	82 700	282 300	24.9	3.32	11.3	83.0	466.0	81.1
		SY370	30	89 700	306 100	26.4	3.40	11.6	83.0	499.8	87.0
		SY425	35	105 100	358 700	31.5	3.34	11.4	84.1	597.7	104.0
		SY482	40	122 400	417 700	36.4	3.36	11.5	85.0	695.6	121.0
		SY485	40	121 900	416 000	36.1	3.38	11.5	84.1	687.4	119.6
		SY540	45	139 400	475 800	41.0	3.40	11.6	85.0	785.3	136.6
		SY600	50	156 500	534 100	45.7	3.43	11.7	85.0	875.0	152.3
		SY620	50	155 700	531 400	45.5	3.42	11.7	88.2	879.0	152.9
		SY680	55	172 800	589 800	50.2	3.44	11.7	88.2	968.7	168.6
		SY760	60	189 000	645 100	54.7	3.46	11.8	90.0	1 062.4	184.9
	Trio	SM444	36	108 200	369 300	32.4	3.34	11.4	83.8	597.0	103.9
		SM483	39	117 100	399 700	34.8	3.37	11.5	84.3	649.8	113.1
		SY550	45	132 500	452 200	39.9	3.32	11.3	84.8	749.7	130.4
		SY720	60	183 500	626 300	54.6	3.36	11.5	86.8	1 043.4	181.6
		SY900	75	234 800	801 400	68.5	3.43	11.7	86.8	1 312.5	228.4
		SY1140	90	283 500	967 600	82.0	3.46	11.8	91.8	1 593.6	277.3
	Quadro	SM740	60	176 500	602 400	54.5	3.24	11.1	86.0	999.6	173.9
R407C	Tandem	SZ170	13.5	38 100	130 000	12.3	3.10	10.6	74.0	229.0	39.8
		SZ180	15	40 200	137 200	12.9	3.12	10.6	75.0	241.0	41.9
		SZ200	16	42 500	145 100	13.7	3.11	10.6	76.0	254.4	44.3
		SZ220	18	48 500	165 500	15.5	3.12	10.6	80.0	288.4	50.2
		SZ242	20	56 200	191 800	18.0	3.13	10.7	80.0	333.2	58.0
		SZ268	22	62 700	214 000	20.0	3.14	10.7	81.1	365.6	63.6
		SZ271	22	61 600	210 200	19.6	3.14	10.7	81.1	360.8	62.8
		SZ281	23	65 500	223 500	20.8	3.15	10.8	81.1	383.2	66.7
		SZ296	24	69 100	235 800	22.0	3.15	10.8	82.0	398.0	69.3
		SZ322	26	74 800	255 300	23.7	3.16	10.8	82.0	433.2	75.4
		SZ350	28	79 000	269 600	25.3	3.12	10.6	84.0	466.0	81.1
		SZ370	30	84 900	289 800	27.2	3.12	10.6	84.0	499.8	87.0
		SY425	35	100 700	343 700	32.2	3.13	10.7	85.4	597.7	104.0
		SY482	40	118 200	403 400	37.1	3.19	10.9	86.5	695.6	121.0
		SY485	40	114 100	389 400	36.4	3.13	10.7	85.8	687.4	119.6
		SY540	45	131 800	449 800	41.3	3.19	10.9	86.8	785.3	136.6
		SY600	50	145 500	496 600	45.5	3.20	10.9	87.0	875.0	152.3
		SY620	50	148 700	507 500	46.1	3.22	11.0	89.0	879.0	152.9
		SY680	55	162 300	553 900	50.3	3.23	11.0	89.1	968.7	168.6
		SY760	60	179 100	611 300	55.2	3.25	11.1	90.5	1 062.4	184.9
	Trio	SZ444	36	105 300	359 400	33.0	3.19	10.9	83.8	597.0	103.9
		SZ483	39	114 000	389 100	35.5	3.21	11.0	83.8	649.8	113.1
		SZ550	45	125 400	428 000	40.9	3.07	10.5	85.8	749.7	130.4
		SY720	60	177 300	605 100	55.7	3.19	10.9	88.3	1 043.4	181.6
		SY900	75	218 200	744 700	68.2	3.20	10.9	88.8	1 312.5	228.4
		SY1140	90	268 700	917 100	82.8	3.25	11.1	92.3	1 593.6	277.3
	Quadro	SZ740	60	167 200	570 600	54.5	3.07	10.5	87.0	999.6	173.9

Rating conditions:
SM compressors - R22: ARI standard conditions, 7.2 °C evap. temp., 54.4°C cond. temp., 8.3 K subcooling, 11.1 K superheat
SZ/SY compressors - R407C: ARI standard conditions, 7.2 °C (dew point) evap. temp., 54.4 °C (dew point) cond. temp., 8.3 K subcooling, 11.1 K superheat

For regular updates and detailed capacities, please refer to **Coolselector®2** www.coolselector.danfoss.com

Model			Nominal tons 60 Hz	Nominal cooling capacity		Power input	Efficiency		Sound power	Swept volume	Displacement
			TR	W	Btu/h	kW	COP W/W	E.E.R. Btu/h/W	dB(A)	cm³/rev	m³/h
R22	Tandem	SM170	13.5	48 500	165 500	14.7	3.29	11.2	77.0	229.0	48.1
		SM180	15	51 900	177 100	15.6	3.32	11.3	78.0	241.0	50.6
		SM200	16	54 300	185 300	16.3	3.33	11.4	78.0	254.4	53.4
		SM220	18	62 200	212 300	18.7	3.33	11.4	81.0	288.4	60.6
		SM242	20	72 300	246 800	21.6	3.35	11.4	81.0	333.2	70.0
		SM248	20	75 500	257 700	21.2	3.56	12.2	80.0	339.0	71.2
		SM268	22	79 300	270 600	23.8	3.33	11.4	84.2	365.6	76.8
		SM271	22	78 000	266 200	23.4	3.33	11.4	85.0	360.8	75.8
		SM272	22	81 300	277 500	22.8	3.57	12.2	80.5	363.0	76.2
		SM281	23	83 100	283 600	24.9	3.34	11.4	85.0	383.2	80.5
		SM294	24	87 100	297 300	24.4	3.58	12.2	81.0	387.0	81.3
		SM296	24	86 300	294 500	26.0	3.32	11.3	86.0	398.0	83.6
		SM322	26	93 800	320 100	28.1	3.34	11.4	87.0	433.2	91.0
		SM350	28	100 600	343 300	30.5	3.29	11.2	85.5	466.0	97.9
		SY370	30	109 000	372 000	32.4	3.36	11.5	85.5	499.8	105.0
		SY425	35	127 400	434 800	38.4	3.32	11.3	86.9	597.7	125.5
		SY482	40	148 100	505 500	44.3	3.35	11.4	88.0	695.6	146.1
		SY485	40	147 600	503 800	43.8	3.37	11.5	87.6	687.4	144.4
		SY540	45	168 600	575 400	49.7	3.39	11.6	88.5	785.3	164.9
		SY600	50	189 000	645 100	55.1	3.43	11.7	89.0	875.0	183.8
		SY620	50	189 400	646 400	55.5	3.41	11.6	92.8	879.0	184.6
		SY680	55	209 900	716 400	60.9	3.45	11.8	93.0	968.7	203.4
		SY760	60	230 700	787 400	66.7	3.46	11.8	95.0	1 062.4	223.1
	Trio	SM444	36	131 500	448 800	39.0	3.37	11.5	87.8	597.0	125.4
		SM483	39	142 900	487 700	42.2	3.39	11.6	88.8	649.8	136.5
		SY550	45	161 000	549 500	48.9	3.29	11.2	87.3	749.7	157.4
		SY720	60	222 200	758 400	66.4	3.35	11.4	89.8	1 043.4	219.1
		SY900	75	283 500	967 600	82.6	3.43	11.7	90.8	1 312.5	275.6
		SY1140	90	346 000	1 180 900	100.1	3.46	11.8	96.8	1 593.6	334.7
	Quadro	SM740	60	210 700	719 100	64.9	3.25	11.1	88.5	999.6	209.9
R407C	Tandem	SZ170	13.5	44 400	151 500	14.1	3.15	10.8	77.0	229.0	48.1
		SZ180	15	48 100	164 200	15.3	3.15	10.8	80.0	241.0	50.6
		SZ200	16	52 200	178 200	16.4	3.19	10.9	80.0	254.4	53.4
		SZ220	18	59 300	202 400	18.6	3.19	10.9	84.0	288.4	60.6
		SZ242	20	68 600	234 100	21.5	3.20	10.9	84.0	333.2	70.0
		SZ268	22	76 300	260 400	24.1	3.17	10.8	85.1	365.6	76.8
		SZ271	22	74 900	255 600	23.6	3.17	10.8	85.1	360.8	75.8
		SZ281	23	79 600	271 700	25.1	3.17	10.8	85.1	383.2	80.5
		SZ296	24	83 900	286 300	26.7	3.15	10.8	86.0	398.0	83.6
		SZ322	26	90 500	308 900	28.6	3.16	10.8	86.0	433.2	91.0
		SZ350	28	95 900	327 300	30.5	3.14	10.7	87.0	466.0	97.9
		SZ370	30	102 000	348 100	32.8	3.11	10.6	87.0	499.8	105.0
		SY425	35	121 100	413 300	39.1	3.10	10.6	88.8	597.7	125.5
		SY482	40	142 300	485 700	45.3	3.14	10.7	90.0	695.6	146.1
		SY485	40	137 600	469 600	43.9	3.13	10.7	89.1	687.4	144.4
		SY540	45	159 000	542 700	50.2	3.17	10.8	90.3	785.3	164.9
		SY600	50	175 800	600 000	55.0	3.20	10.9	90.5	875.0	183.8
		SY620	50	178 400	608 900	56.2	3.18	10.9	92.5	879.0	184.6
		SY680	55	195 200	666 200	61.0	3.20	10.9	92.6	968.7	203.4
		SY760	60	214 600	732 400	67.0	3.20	10.9	94.0	1 062.4	223.1
	Trio	SZ444	36	127 800	436 200	40.1	3.19	10.9	87.8	597.0	125.4
		SZ483	39	137 900	470 600	43.0	3.21	11.0	87.8	649.8	136.5
		SZ550	45	150 700	514 300	49.3	3.06	10.4	88.8	749.7	157.4
		SY720	60	213 400	728 300	68.0	3.14	10.7	91.8	1 043.4	219.1
		SY900	75	263 600	899 700	82.5	3.20	10.9	92.3	1 312.5	275.6
		SY1140	90	321 900	1 098 600	100.5	3.20	10.9	95.8	1 593.6	334.7
	Quadro	SZ740	60	200 900	685 700	65.7	3.06	10.4	90.0	999.6	209.9

Rating conditions:
SM compressors - R22: ARI standard conditions, 7.2 °C evap. temp., 54.4°C cond. temp., 8.3 K subcooling, 11.1 K superheat
SZ/SY compressors - R407C: ARI standard conditions, 7.2 °C (dew point) evap. temp., 54.4 °C (dew point) cond. temp., 8.3 K subcooling, 11.1 K superheat

For regular updates and detailed capacities, please refer to **Coolselector®2** software

Operating conditions

The scroll compressor application range is influenced by several parameters which need to be monitored for a safe and reliable operation. These parameters and the main recommendations for good practice and safety devices are explained hereunder.

- **Refrigerant and lubricants refer to FRCC.PC.003**
- **Motor supply**
- **Compressor ambient temperature**
- **Application envelope (evaporating temperature, condensing temperature, return gas temperature).**

Motor supply

SM / SY / SZ scroll compressors can be operated at nominal voltages as indicated below. Under-voltage and over-voltage operation is allowed within the indicated voltage ranges. In case of risk of under-voltage operation, special attention must be paid to current draw.

		Motor voltage code 3	Motor voltage code 4	Motor voltage code 6	Motor voltage code 7	Motor voltage code 9
Nominal voltage	50 Hz	-	380-400 V - 3 ph	230 V - 3 ph	500 V - 3 ph	-
Voltage range	50 Hz	-	342-440 V	207 - 253 V	450 - 550 V	-
Nominal voltage	60 Hz	200-230 V - 3 ph	460 V - 3 ph	-	575 V - 3 ph	380 V - 3 ph
Voltage range	60 Hz	180 - 253 V	414 - 506 V	-	517 - 632 V	342 - 418 V

Compressor ambient temperature

SM / SY / SZ compressors can be applied from -35°C to +63°C (for SM/SZ084 to 185) and +53°C (for SY240 to 380) ambient temperature. The compressors are designed as 100 % suction gas cooled without need for additional fan cooling. Ambient temperature has very little effect on the compressors performance.

Application envelope

The parallel assemblies recommended design from Danfoss Commercial Compressors have been qualified to ensure there is no impact on the compressor operating envelopes. Consequently, the Danfoss scroll tandem, trio and quadro assemblies have the operating limits as shown below.

More details can be found in the Application Guidelines for Danfoss scroll compressors (FRCC.PC.003).

R22

Tandem: SM170 to 370
SY425 to 760
Trio: SM444 to 1140
Quadro: SM740

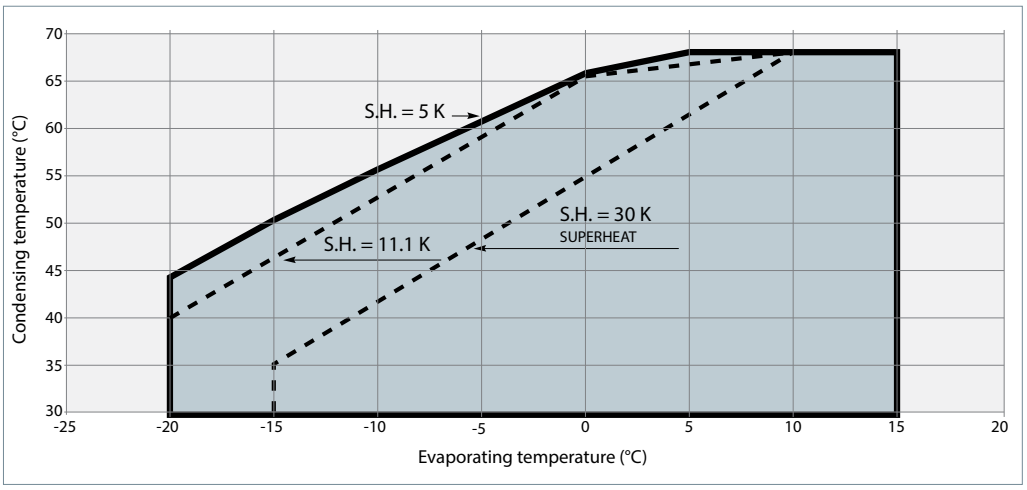

R134a

Tandem: SZ170 to 370
Trio: SZ444 to 550
Quadro: SZ740

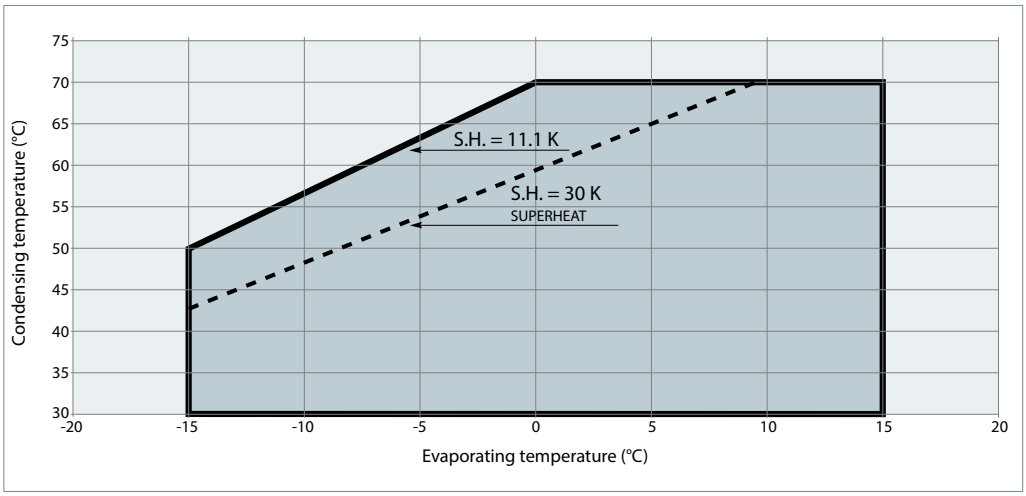

R134a

Tandem: SY425 to 760
Trio: SY720 to 1140

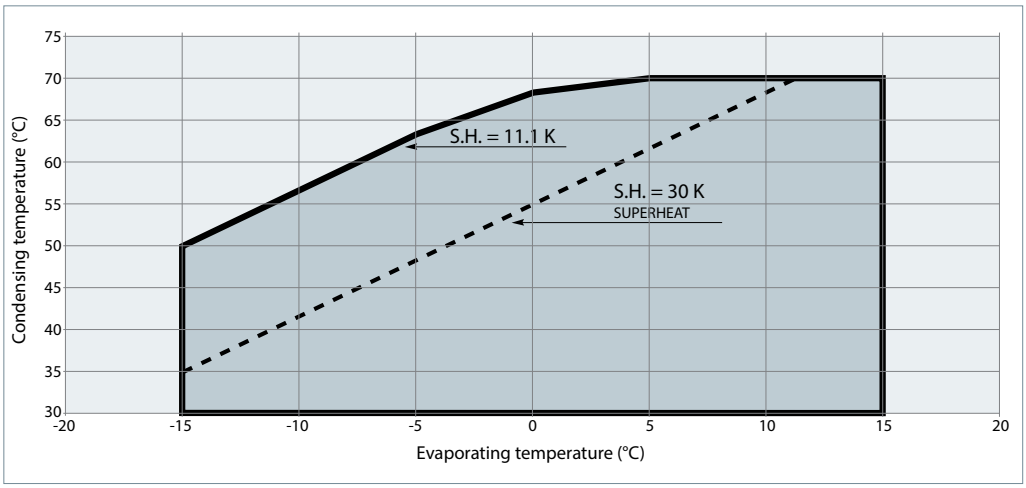

R407C

At DEW temperature

Tandem: SZ170 to 370
SY425 - 485
Trio: SZ444 to 550
Quadro: SZ740

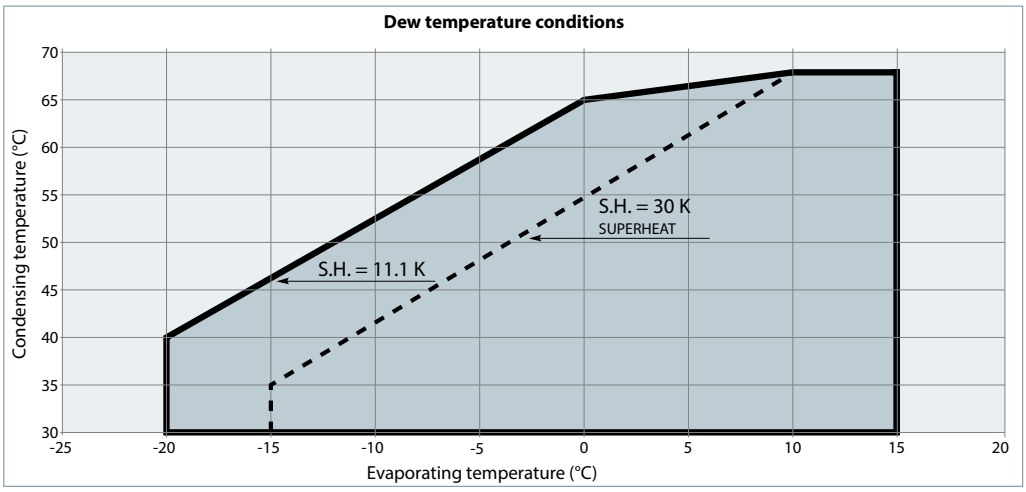

R407C

At DEW temperature

Tandem: SY482
SY540 to 760
Trio: SY720 to 1140

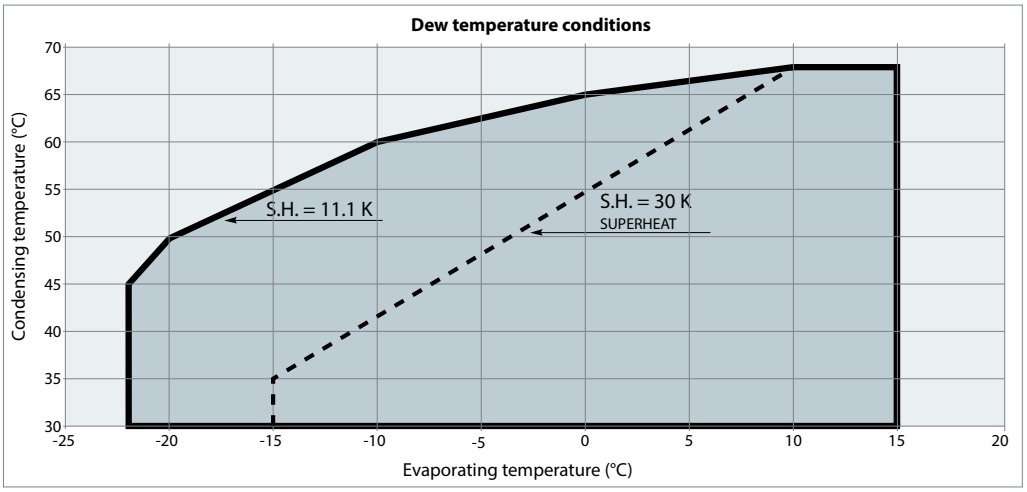

R404A/R507A

Tandem: SZ170 to 370
Trio: SY444 to 550
Quadro: SZ740

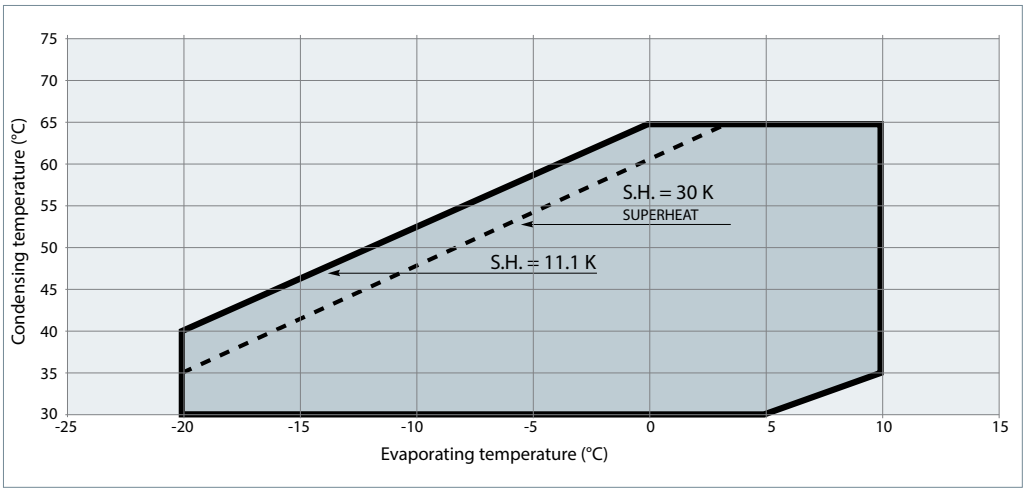

R513A

Tandem: SY482
SY540 to 760
Trio: SY720 to 1140

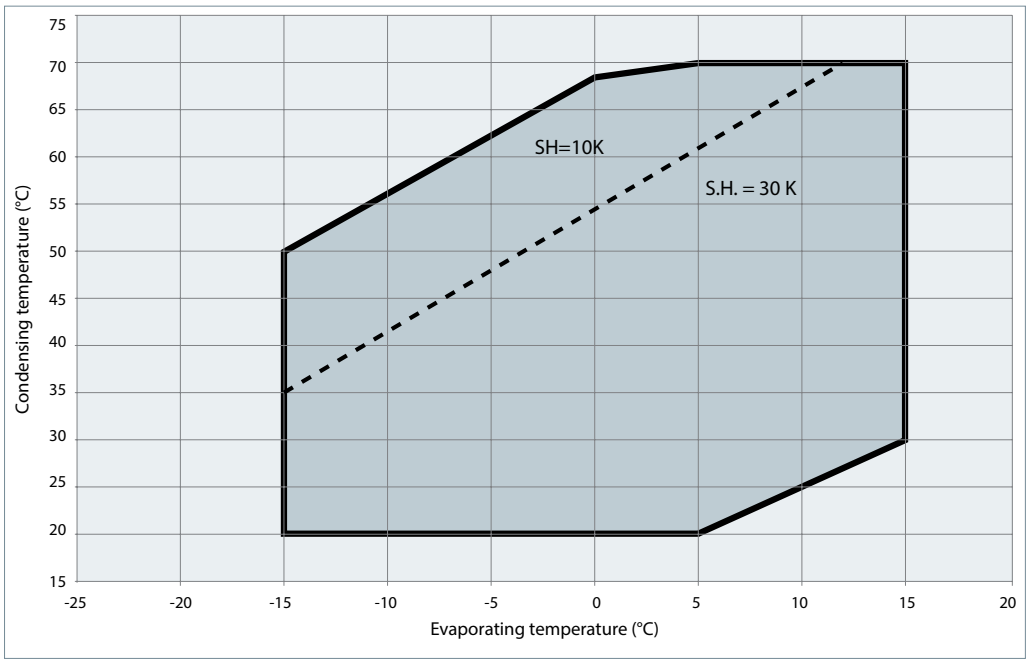

R513A

Tandem: SZ296 to 370
SY425
Trio: SZ444 to 550

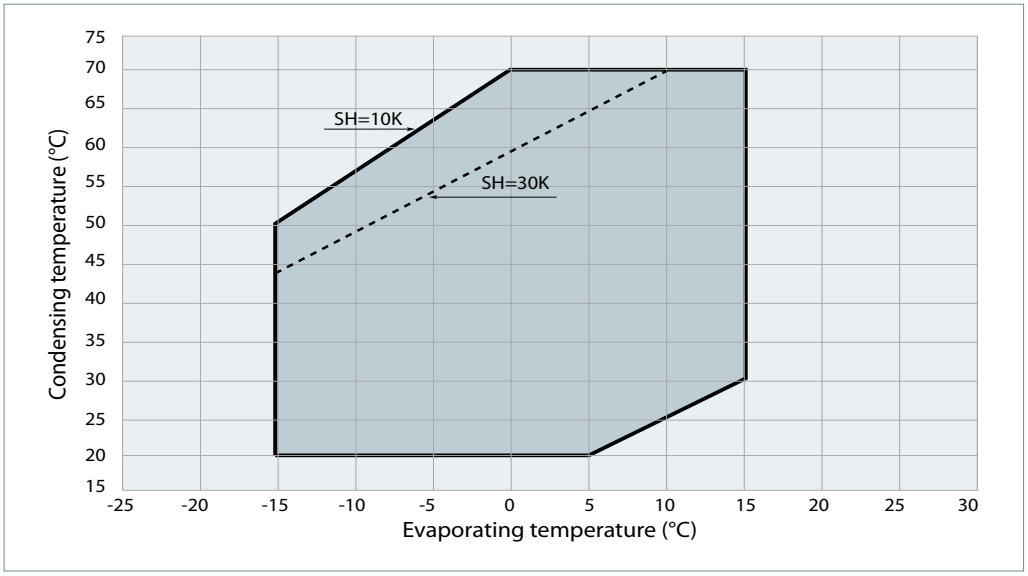

Discharge temperature protection

The discharge gas temperature of each compressor must not exceed 135°C.

When DGT protection is required (if the high and low pressure switch settings do not protect compressor against operation beyond its specific application envelope and on heat pumps) each compressor must be equipped with a discharge thermostat kit (available in section "Accessories").

When a safety switch trips due to one of discharge gas thermostat, the compressor must stop immediately and must not restart until the discharge temperature is back to normal and the safety switch is closed again.

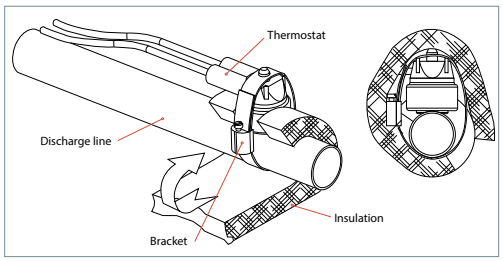

High and low pressure protection

The pump down pressure switch must have a set point slightly higher than the lowest compressor safety pressure switch set point. The compressor switch must never be bypassed and shall stop all the compressors. The high-pressure safety pressure switch shall stop all compressors. Please refer to Danfoss scroll compressors single application guidelines (FRCC.PC.003.) for recommended settings.

Whenever possible (ie. PLC control) it is recommended to limit the possibilities of compressor auto-restart to less than 3 to 5 times during a period of 12 hours when caused low LP safety switch settings.

Cycle rate limit

The system must be designed in a way that guarantees a minimum compressor running time of 2 minutes so as to provide for sufficient motor cooling after start-up along with proper oil return. Note that the oil return may vary since it depends upon system design.

There must be no more than 12 starts per hour (6 when a resistor soft-start accessory is introduced); a number higher than 12 reduces the service life of the motor-compressor unit. If necessary, place an anti-short-cycle timer in the control circuit, then connected as shown in the wiring diagram in the Danfoss scroll compressors application guidelines. A three-minute (180-sec) time-out is recommended.

Please refer to the Selection and Application Guidelines for Danfoss scroll compressors for general system design recommendations that are valid for single compressors as well as for parallel systems.

Typical system requirements and recommendations for parallel installations are listed below.

Essential piping design considerations

Proper piping practices should be employed to ensure adequate oil return, even under minimum load conditions with special consideration given to the size and slope of the tubing coming from the evaporator. Tubing returns from the evaporator should be designed so as to not trap oil and to prevent oil and refrigerant migration back to the compressor during off cycles. A double suction riser may be required for partial load operation if suction gas velocity is not sufficient to ensure proper oil return.

Piping should be designed with adequate three-dimensional flexibility. It should not be in contact with the surrounding structure, unless a proper tubing mount has been installed. This protection proves necessary to avoid excess vibration, which can ultimately result in connection or tube failure due to fatigue or wear from abrasion. Aside from tubing and connection damage, excess vibration may be transmitted to the surrounding structure and generate an unacceptable noise level within that structure as well (for more information on noise and vibration, see section "Sound and vibration management").

The upstream pipe configuration must not be allowed to influence refrigerant flow. Therefore it is recommended that the straight segment piping must be not less then 5 times the diameter of the upstream piping.

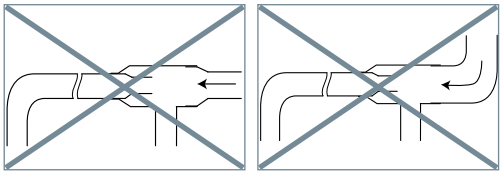

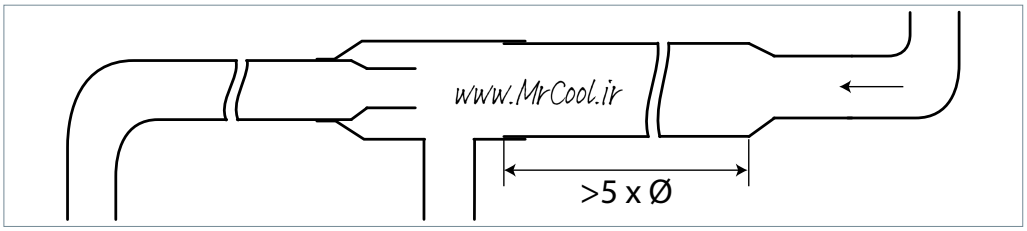

If the evaporator lies above the compressor, as is often the case in split or remote condenser systems, the addition of a pump-down cycle is strongly recommended. If a pump-down cycle is omitted, the suction line should have a loop at the evaporator outlet to prevent refrigerant from draining into the compressor during off-cycles.

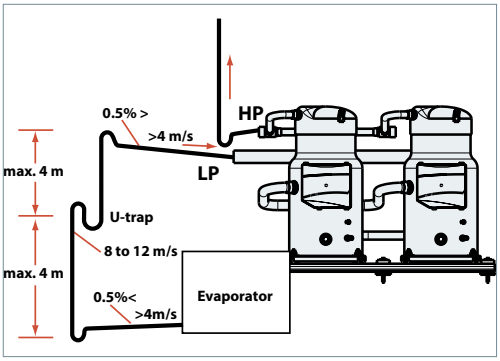

If the evaporator was situated below the compressors, the suction riser must be trapped so as to prevent liquid refrigerant from collecting at the thermal bulb location.

When the condenser is mounted at a higher position than the compressors, a suitably sized "U"-shaped trap close to the compressors is necessary to prevent oil leaving the compressor from draining back to the discharge side of the compressors during off cycle. The upper loop also helps avoid liquid refrigerant from draining back to the compressor when stopped.

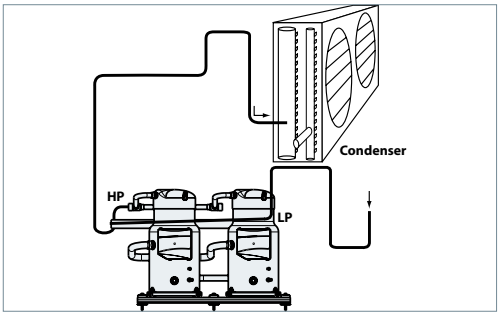

Expansion device

When the parallel installation is serving a single evaporator system the dimensioning of the expansion device (thermostatic or electronic) becomes critical and must be made in relation to both minimum and maximum capacity. This will ensure correct superheat control in all situations, with the minimum of 5K superheat at the compressor suction. The expansion device should be sized to ensure proper control of the refrigerant flow into the evaporator. An oversized valve may result in erratic control. Proper selection could imply slightly undersized expansion valve at full load. This consideration is especially important in manifolded units where low load conditions may require the frequent cycling of compressors. This can lead to liquid refrigerant entering the compressor if the expansion valve does not provide stable refrigerant superheat control under varying loads. The superheat setting of the expansion device should be sufficient to ensure proper superheat levels during low loading periods. A minimum of 5K stable superheat is required. In addition, the refrigerant charge should be sufficient to ensure proper subcooling within the condenser so as to avoid the risk of flashing in the liquid line before the expansion device.

Refrigerant charge limits

Danfoss SM / SY / SZ compressors can tolerate liquid refrigerant up to a certain extend without major problems. However, excessive liquid refrigerant in the compressor is always unfavourable for service life. Besides, the installation cooling capacity may be reduced because of the evaporation taking place in the compressor and/or the suction line instead of the evaporator. System design must be such that the amount of liquid refrigerant in the compressor is limited. In this respect, follow the guidelines given in the section: "Essential piping design recommendations" in priority.

Use the tables below to quickly evaluate the required compressor protection in relation with the system charge and the application.

Compressor models	Tandem Units									
	S 170 - 180 - 200 - 248 - 272 - 294	S 220 - 242	S 268 - 271 - 281	S 296 - 322	S 350 - 370	S 425	S 482 - 485	S 540	S 620	S 600 - 680 - 760
Refrigerant charge limit (kg)	10	12	15	16.5	17.5	19	21	23.5	24	26

Compressor models	Trio units				Quadro units
	S 444 - 483	S 550	S 720	S 900 - 1140	S 740
Refrigerant charge limit (kg)	21	23	27	34	30

	BELOW charge limit	ABOVE charge limit
Cooling only systems, Packaged units	✓ No test or additional safeties required	REQ Refrigerant migration & floodback test REQ Sump heater
Cooling only systems with remote condenser and split system units	REC Refrigerant migration & floodback test REC Crankcase heater, because full system charge is not definable (risk of overcharging)	REQ Refrigerant migration & floodback test REQ Sump heater REC Liquid receiver (in association with LLSV & pump down)
Reversible heat pump system	REQ Specific tests for repetitive floodback REQ Sump heater REQ Defrost test	

REC Recommended REQ Required ✓ No test or additional safeties required

More detailed information can be found in the paragraphs system design recommendation of FRCC.PC.003.

Sump heater

The surface sump heaters are designed to protect the compressor against off cycle migration of refrigerant. When the compressor is idle, the oil temperature in the sump of the compressor must be maintained at no lower than 10 K above the saturation temperature of the refrigerant on the low-pressure side. This requirement ensures that the liquid refrigerant is not accumulating in the sump. A sump heater is only effective if capable of sustaining this level of temperature difference.

Since the total system charge may be undefined, a sump heater is recommended on all stand-alone compressors and split systems. In addition, any system containing a refrigerant charge in excess of the maximum recommended system charge for compressors requires a crankcase heater. A crankcase heater is also required on all reversible cycle applications.

The heater must be energized for a minimum of 6 hours before initial start-up (compressor service valves opened) and must be energized 15 minutes after all compressors have stopped and then whenever compressors are off. Provide separate electrical supply for the heaters so that they remain energized even when the machine is out of service (eg. seasonal shutdown).

Sump heater accessories are available from Danfoss (see section "Accessories").

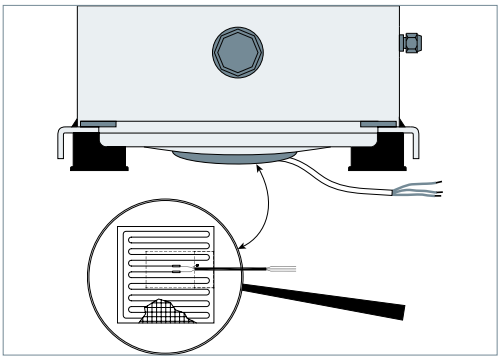

External check valve

Tandem, trio and quadro assemblies do not require the installation of an external check valve as each compressor comes equipped with a factory mounted internal check valve, which prevents the compressor running backwards when stopped while others are in operation.

Specific application recommendations are fully described in Application Guideline (FRCC.PC.003), please refer to this document.

Additionally specific tests and defrost logic are required.

Required tests

The following tests should be done to validate effective operation and oil equalisation of compressors in parallel installation at any operating conditions of final application.

Test conditions

Tests shall be done at three points in final application envelope:

- ARI based conditions.
- Low evaporation (SH10K): low flow rate / pure oil / low oil level.
- High load (SH10K): high flow rate / diluted oil / high oil level.

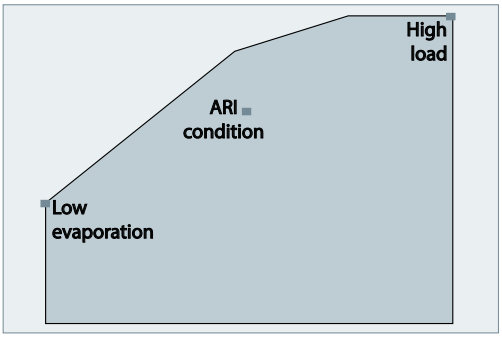

Test sequences

- Continuous for all compressors: 100% charge (all compressors continuous running).
- Continuous with partial charge: all partial charges configuration must be tested.
- On/Off test: After 2 minutes shutdown of any compressor, the oil level has to retrieve a proper oil level within 1 minute when the compressor is switched back on.
- Transient , 100% load: in transient condition such as end of defrost with temporary liquid floodback, check that oil return to normal level.

Oil level criteria

- The oil level of running compressors must be visible or full in the sight glass of running compressors at all operating conditions described before.
- The oil level of idle compressors may disappear in the oil sight glass.
- The oil level must retrieve a visible level in all compressors after the unit is stopped.
- Oil level top up might be necessary to retrieve a visible oil level in the sight glasses. Always use a Danfoss oil from new can (see section "Accessories").

Defrost cycle logic

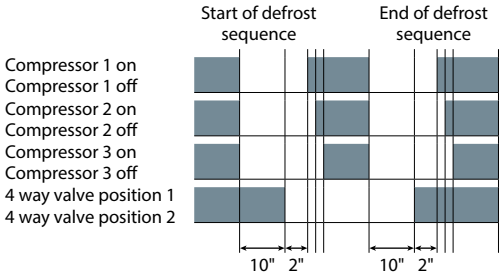

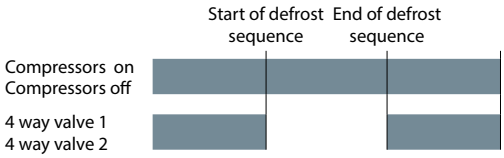

In order to limit liquid amount handled per compressor when beginning & ending defrost, one of the 2 defrost cycle logics are required:

- stop all compressors before moving the 4 way valve:
  - first stop compressors
  - wait for 10 seconds
  - move the 4 way valve
  - wait for 2 seconds
  - restart the compressors with a max. 0.5 second delay between 2 successive starts

or

- keep all compressors running during defrost cycle

Defrost cycle logic must respect all system components recommendations, in particular 4 way valve Max. Operating Pressure Differential. EXV can also be opened when compressors are stopped and before 4 way valve is moving in order to decrease pressure difference. Opening degree and time have to be set in order to keep a minimum pressure for 4 way vavle moving.

Running sound level

The global sound level of "n" identical compressors is:

$$L_{GLOBAL} = Li + 10\ Log_{10}\ n$$

Example for the trio
SM720 = 3 x SM240 (50Hz)
L_{SM240} = 82dB(A)

$L_{SM720} = 82 + 10\ Log_{10}\ 3 = 86.8dB(A)$

The global sound level of "n" compressors with respectively L_i sound level is:

$$L_{GLOBAL} = 10\ Log_{10}\left(\sum_{i=1}^{i=n} 10^{0.1*Li}\right)$$

Example for the tandem
SM268 = SM120 + SM148 (50Hz)
L_{SM120} = 75dB(A), L_{SM148} = 79dB(A)

$L_{SM268} = 10\ Log_{10}\ (10^{0.1x75} + 10^{0.1x79}) = 80.5dB(A)$

Model		50Hz		60Hz	
		R22	R407C	R22	R407C
Tandem	S 170	73.0	74.0	77.0	77.0
	S 180	73.0	75.0	78.0	80.0
	S 200	73.0	76.0	78.0	80.0
	S 220	78.0	80.0	81.0	84.0
	S 242	78.0	80.0	81.0	84.0
	S 248	76.0		80.0	
	S 268	80.5	81.1	84.2	85.1
	S 271	80.8	81.1	85.0	85.1
	S 272	76.5		80.5	
	S 281	80.8	81.1	85.0	85.1
	S 294	77.0		81.0	
	S 296	82.0	82.0	86.0	86.0
	S 322	82.5	82.0	87.0	86.0
	S 350	83.0	84.0	85.5	87.0
	S 370	83.0	84.0	85.5	87.0
	S 425	84.1	85.4	86.9	88.8
	S 482	85.0	86.5	88.0	90.0
	S 485	84.1	85.8	87.6	89.1
	S 540	85.0	86.8	88.5	90.3
	S 600	85.0	87.0	89.0	90.5
	S 620	88.2	89.0	92.8	92.5
	S 680	88.2	89.1	93.0	92.6
	S 760	90.0	90.5	95.0	94.0
Trio	S 444	83.8	83.8	87.8	87.8
	S 483	84.3	83.8	88.8	87.8
	S 550	84.8	85.8	87.3	88.8
	S 720	86.8	88.3	89.8	91.8
	S 900	86.8	88.8	90.8	92.3
	S 1140	91.8	92.3	96.8	95.8
Quadro	S 740	86.0	87.0	88.5	90.0

Sound power are given at rated ARI conditions, measured in free space.

Sound generation in a refrigeration or air conditioning system

Typical sound and vibration in Refrigeration and Air-Conditioning systems encountered by design and service engineers may be broken down into the following three source categories.

Sound radiation: this generally takes an airborne path.

Mechanical vibrations: these generally extend along the parts of the unit and structure.

Gas pulsation: this tends to travel through the cooling medium, i.e. the refrigerant.

The following sections will focus on the causes and methods of mitigation for each of the above sources.

Compressor sound radiation

For sound radiating from the compressors, the emission path is airborne and the sound waves are travelling directly from the machine in all directions.

The Danfoss SM / SY / SZ scroll compressor is designed to be quiet and the frequency of the sound generated is pushed into the higher ranges, which not only are easier to reduce but also do not generate the penetrating power of lower-frequency sound.

Use of sound-insulation materials on the inside of unit panels is an effective means of substantially reducing the sound being transmitted to the outside. Ensure that no components capable of transmitting sound / vibration within the unit come into direct contact with any non-insulated parts on the walls of the unit.

Because of the Danfoss scroll compressors unique design of a full-suction gas-cooled motor, compressor body insulation across its entire operating range is possible. Acoustic hoods are available from Danfoss Commercial Compressors as accessories. They have been developed to meet specific extra low noise requirement. They incorporate sound proofing materials and offer excellent high and low frequency attenuation. These hoods are quick and easy to install and do not increase the overall size of the compressors to a great extend. Refer to section "Running sound level" for sound attenuation and code numbers.

Mechanical vibrations

Vibration isolation constitutes the primary method for controlling structural vibration. Danfoss tandem, trio and quadro scroll compressors have been designed to produce minimal vibration during operations. To reduce transmission of vibrations, rubber mounting grommets are used, either to mount the compressors on the unit frame or to mount the unit frame in the system. In addition, it is extremely important that the frame supporting the mounted compressors be of sufficient mass and stiffness to help dampen any residual vibration potentially transmitted to the frame.

For further information on mounting requirements, please refer to the section on mounting assembly.

The tubing should be designed so as to both reduce the transmission of vibrations to other structures and withstand vibration without incurring any damage. Tubing should also be designed for three-dimensional flexibility. For more information on piping design, please see the section entitled "Essential piping design considerations".

Gas pulsation

Manifolded compressors are equivalents to lagged sources of gas pulsation. Therefore pulse level can vary during time. On heat pump installations and other installations where the pressure ratio lies beyond the typical range, testing should be conducted under all expected conditions and operating configurations to ensure that minimum gas pulsation is present. If an unacceptable level is identified, a discharge muffler with the appropriate resonant volume and mass should be installed. This information can be obtained from the component manufacturer.

Operation principle

Tandem units SM/SZ170 to SZ425 & SZ485 use the dynamic system for oil equalisation. This allows both the upstream compressor and the downstream compressor to run alone and to provide proper capacity for part load operation.

When the upstream compressor A runs alone, all suction gas and returned oil goes to this compressor. The sump of the downstream compressor B is at a higher pressure than compressor A. Should there be an excess of oil in the downstream compressor, which normally does not occur, the pressure difference will force the excess oil towards the upstream compressor.

When the downstream compressor B runs alone, all suction gas and a portion of oil goes to compressor B. The majority of returned oil goes to A under the effect of gravity. The sump of compressor A is at a higher pressure than compressor B, which allows any excess of oil to overflow to compressor B.

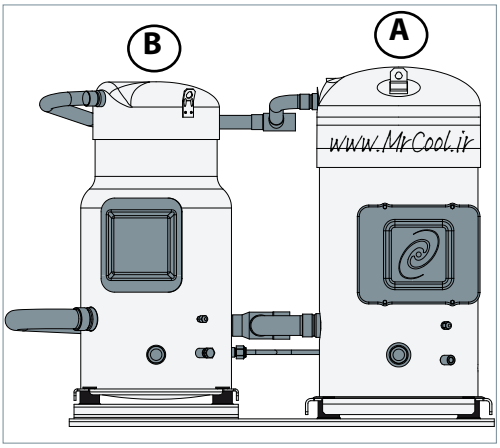

Tandem model	Composition	Suction	Discharge	Oil equalisation tube	Drawings
SM/SZ170	S084 + S084	1"5/8	1"1/8	3/8"	8552021
SM/SZ180	S090 + S090	1"5/8	1"1/8	3/8"	8552021
SM/SZ200	S100 + S100	1"5/8	1"1/8	3/8"	8552021
SM/SZ220	S110 + S110	1"5/8	1"3/8	3/8"	8552027
SM/SZ242	S120 + S120	1"5/8	1"3/8	3/8"	8552027
SM/SZ268	S148 + S120	2"1/8	1"3/8	3/8"	8552044 (8552051*)
SM/SZ271	S161 + S110	2"1/8	1"3/8	3/8"	8552044 (8552051*)
SM/SZ281	S161 + S120	2"1/8	1"3/8	3/8"	8552044 (8552051*)
SM/SZ296	S148 + S148	2"1/8	1"3/8	3/8"	8552045 (8552050*)
SM/SZ322	S161 + S161	2"1/8	1"3/8	3/8"	8552045 (8552050*)
SM/SZ350	S175 + S175	2"1/8	1"3/8	3/8"	8551018
SM/SZ370	S185 + S185	2"1/8	1"3/8	3/8"	8551018
SY/SZ425	S240+ S185	2"1/8	1"3/8	3/8"	8556015
SY/SZ485	S300 + S185	2"1/8	1"3/8	3/8"	8556016

(*): These models have one specific outline for code 3 motor voltage.

Ordering information

Different tandem assembly kits are available:

- Kit ① containing the suction and discharge Tees sleeves and the suction oil separator / gas restrictor.
- Kit ② containing the suction oil separator / gas restrictor only.

Tandem model	Connection	Configuration example	Tandem assembly kit code no		Oil equalisation fittings
			Kit ①	Kit ②	
SM/SZ170	Brazed	SZ084-4VI + SZ084-4VI	7703251	7765012	2 x 023U801466
SM/SZ180	Brazed	SZ090-4VI + SZ090-4VI	7703251	7765012	2 x 023U801466
SM/SZ200	Brazed	SZ100-4VI + SZ100-4VI	7703251	7765012	2 x 023U801466
SM/SZ220	Brazed	SZ110-4VI + SZ110-4VI	7703384	7765025	2 x 023U801466
SM/SZ242	Brazed	SZ120-4VI + SZ120-4VI	7703384	7765025	2 x 023U801466
SM/SZ268	Brazed	SZ148-4VAI + SZ120-4VI	7703390	7765025	2 x 023U801466
SM/SZ271	Brazed	SZ161-4VAI + SZ110-4VI	7703390	7765025	2 x 023U801466
SM/SZ281	Brazed	SZ161-4VAI + SZ120-4VI	7703390	7765025	2 x 023U801466
SM/SZ296	Brazed	SZ148-4VAI + SZ148-4VAI	7703390	7765025	2 x 023U801466
SM/SZ322	Brazed	SZ161-4VAI + SZ161-4VAI	7703390	7765025	2 x 023U801466
SM/SZ350	Rotolock	SZ175-4SCI + SZ175-4SCI	7703371	7765013	2 x 023U801466
SM/SZ350	Brazed	SZ175-4PCI + SZ175-4PCI	www.MrCool.ir	7765017	2 x 023U801466
SM/SZ370	Rotolock	SZ185-4SCI + SZ185-4SCI	7703371	7765013	2 x 023U801466
SM/SZ370	Brazed	SZ185-4PCI + SZ185-4PCI	-	7765017	2 x 023U801466
SY/SZ425	Brazed	SZ240A4AAI + SZ185-4PCI	-	7765027	023U801666 + 023U801466
SY/SZ485	Rotolock	SZ300A4AAI + SZ185-4PCI	-	7765027	023U801666 + 023U801466

Refer to FRCC.PC.003 "Ordering information & packaging" section for other codes or other connections, or other motor protection version or industrial pack version.

Compressor mounting

Individual compressors must always be mounted using the provided mounting grommets ① and metal sleeves ② that isolate the compressor from the base plate. If this is not done the system will transmit vibrations and reduce compressor life. The rubber grommets must be compressed until contact between the flat washer ③ and the steel-mounting sleeve ② is made. A lock washer ④ must be placed under bolt head to avoid untightening.

The required bolt size for the SM/SZ084 to 185 compressors is HM8. This bolt must be tightened to a torque of 21 Nm. The bolts and washers are supplied with the assembly kit.

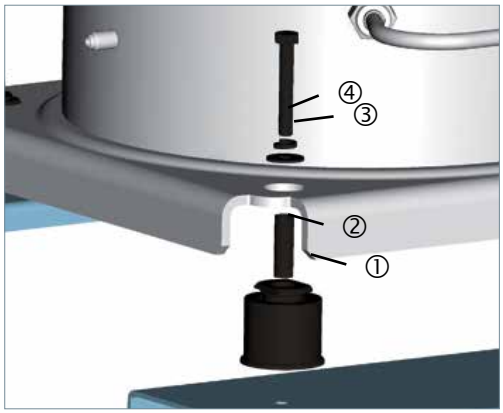

Supplied with the compressor
Included in tandem assembly kit
Not supplied

The required bolt size for the SY/SZ240 to 380 compressors is HM10. The minimum required flat washer outside diameter is 27 mm. Mounting bolts must be tightened to a torque of 40 Nm. These bolts and washers are not supplied with the compressor.

Supplied with the compressor
Included in tandem assembly kit
Not supplied

For tandem SY/SZ425 - 485: An additional baseplate ⑤ (30.7 mm thick) has to be added under S185 model, in order to have the sight glasses at the same level.

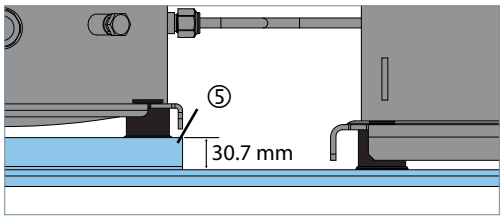

Supplied with the compressor
Included in tandem assembly kit
Not supplied

Oil equalisation connection

A 3/8" oil equalisation line must be connected to oil equalisation fitting (3/8" on SM/SZ084 to SM/SZ/SY185 and 1/2" on SZ/SY240/300)

For SM/SZ084 to SM/SY/SZ185 compressors (with 3/8" oil equalisation fitting), a Danfoss FSA33 fitting is to be used (code n° 023U801466).

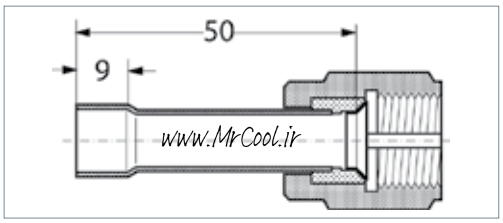

For SY/SZ240 and SY/SZ300 compressors (with 1/2" oil equalisation fitting), a Danfoss FSA44 fitting is to be used (code n° 023U801666) and a tube restriction from 1/2" to 3/8" is needed.

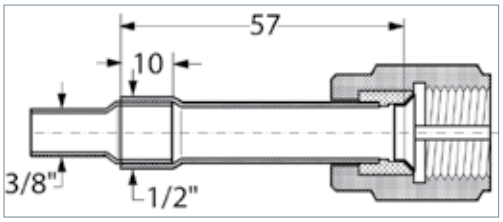

Restrictor assembly

Special attention is required when mounting the restrictor tube into the suction tee. The extremity of the restrictor tube must be located as shown below.

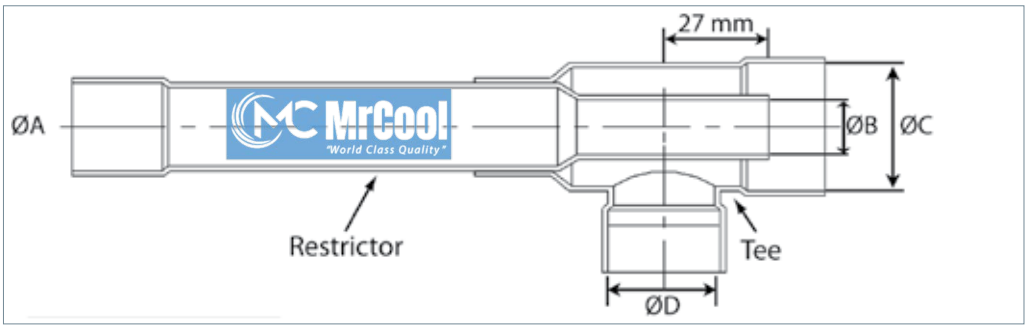

Tandem model	Connections	Restrictor ØB	Restrictor ØA	Tee ØC	Tee ØD
SM/SZ170-180-200	Brazed	17.8 mm	1"1/8 (28.70 mm)	1"5/8 (41.275 mm)	1"1/8 (28.70 mm)
SM/SZ220-242	Brazed	17.8 mm	1"3/8 (35.05 mm)	1"5/8 (41.275 mm)	1"3/8 (35.05 mm)
SM/SZ271-281	Brazed	17.8 mm	1"3/8 (35.05 mm)	2"1/8 (53.975 mm)	1"3/8 (35.05 mm)
SM/SZ296 www.MrCool.ir	Brazed	17.8 mm	1"3/8 (35.05 mm)	2"1/8 (53.975 mm)	1"5/8 (41.40 mm)
SM/SZ322	Brazed	17.8 mm	1"3/8 (35.05 mm)	2"1/8 (53.975 mm)	1"3/8 (35.05 mm)
SM/SZ350-370	Rotalock	21.5 mm	1"3/8 (35.05 mm)	2"1/8 (53.975 mm)	1"3/8 (35.05 mm)
SM/SZ350-370	Brazed	21.5 mm	1"5/8 (41.40 mm)	2"1/8 (53.975 mm)	1"5/8 (41.40 mm)
SY/SZ425-485	Brazed	16.9 mm	1"5/8 (41.40 mm)	2"1/8 (53.975 mm)	1"5/8 (41.40 mm)

Operation principle

SM248 -272 - 294 tandems use the static system to balance the oil level between the compressors. Each of the compressors may run alone to provide proper capacity for part load operation. The system has been designed to ensure a precise pressure balancing between the sumps, facilitating the oil equalisation by gravity.

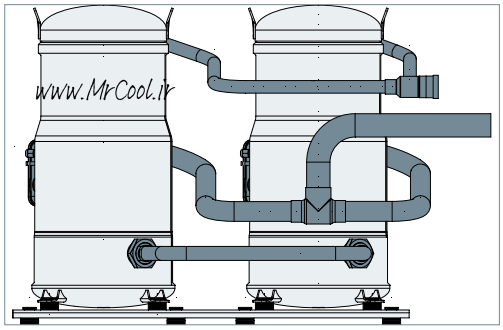

Tandem model	Composition	Suction	Discharge	Oil equalisation line	Outline drawing number
SM248	SM124 + SM124	1"5/8	1"3/8	7/8"	8556051
SM272	SM124 + SM147	1"5/8	1"3/8	7/8"	8556051
SM294	SM147 + SM147	1"5/8	1"3/8	1"1/8	8556051

Ordering information

Kit ① contains the parts 1 to 6 as marked below in dark blue.

Tandem model	Configuration example	Tandem assembly kit code no.
SM248	120H0185 + 120H0185	7777044
SM272	120H0185 + 120H0191	7777050
SM294	120H0191 + 120H0191	7777054

Refer to FRCC.PC.003 "Ordering information & packaging" section for other codes or industrial pack version.

Compressor mounting

The tandem rails are fixed on the unit frame using the flexible grommets supplied with the compressor. An additional 7 mm rigid spacer ② must be placed under these grommets. The compressors are fixed on the rails using the 4 mm flat washers ① and 14 mm rigid spacers ③, included in the "tandem assembly kit".

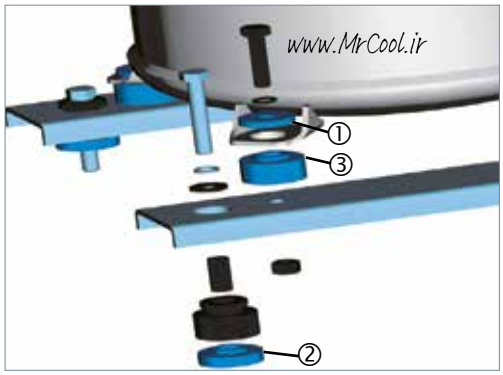

Supplied with the compressor
Included in tandem assembly kit
Not supplied

Oil equalisation connection

The oil level naturally balances by a 7/8" pipe for SM248-272 and 1"1/8 pipe for SM294. "Tandem assembly kit" include 1"3/4 - 7/8" or 1"3/4 - 1"1/8 adaptator sleeves ④ and Teflon seals ⑤ to connect the 7/8" or 1"1/8 equalisation pipe on 1"3/4 oil connectors.

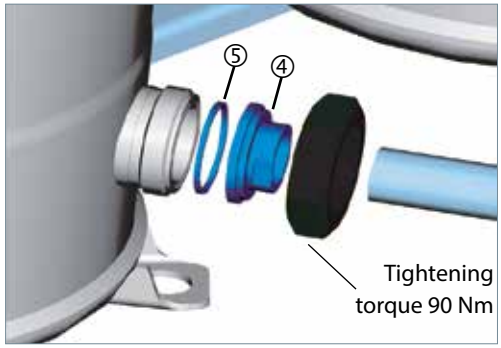

Supplied with the compressor
Included in tandem assembly kit
Not supplied

Suction washer

Tandem SM272 is composed of compressors with different capacity, which influences the sump pressure equalisation. To compensate for this effect, a restrictor ⑥ must be mounted at the suction of compressor SM124.

For tandems SM248 and SM294 no restrictor is required.

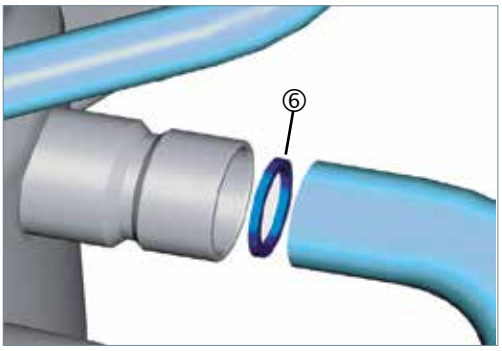

Supplied with the compressor
Included in tandem assembly kit
Not supplied

Operation principle

SY/SZ 482-540-600-680-760 tandems use the static system to balance the oil level between the compressors. Each of the compressors may run alone to provide proper capacity for part load operation. The system has been designed to ensure a precise pressure balancing between the sumps, facilitating the oil equalisation by gravity. The discharge line is shown with two tees, to indicate that both left and right side discharge header are possible.
Note: the compressor position has to be respected for SY/SZ540 tandem, as shown beside.

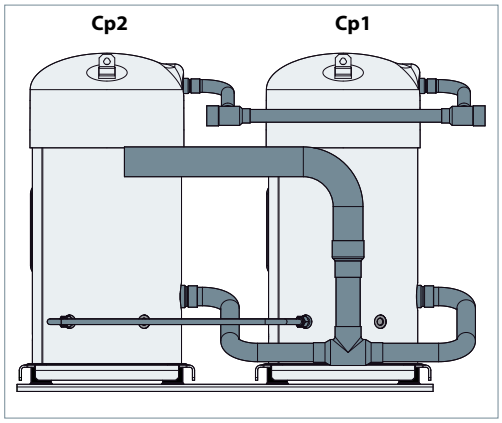

Tandem model	Composition	Suction	Discharge	Oil equalisation line	Outline drawing number
SY/SZ482	S 240 + S 240	2"5/8	1"5/8	1/2"	8556013
SY/SZ540	S 240 + S 300	2"5/8	1"5/8	1/2"	8556034
SY/SZ600	S 300 + S 300	2"5/8	1"5/8	1/2"	8556013
SY/SZ620	S 240 + S 380	2"5/8	2"1/8	1/2"	8556036
SY/SZ680 left suction	S 300 + S 380	2"5/8	2"1/8	1/2"	8556032
SY/SZ680 right suction	S 300 + S 380	2"5/8	2"1/8	1/2"	8556032
SY/SZ760	S 380 + S 380	2"5/8	2"1/8	1/2"	8556029

Ordering information

Tandems SY/SZ482-600-620-760 don't require specific parts to compose the tandem.

Tandems SY/SZ540-680 only require a suction restrictor as indicated in below table.

Tandem model	Composition		Code number	Washer Ø (mm)	Oil equalisation fitting	Washer in suction of compressor
	Cp1	Cp2				
SY/SZ482	S 240 +	S 240			2 x 023U801666	
SY/SZ540	S 240 +	S 300	7777023	29.5	2 x 023U801666	Cp1
SY/SZ600	S 300 +	S 300			2 x 023U801666	
SY/SZ620	S 240 +	S 380			2 x 023U801666	
SY/SZ680 left suction	S 300 +	S 380	7777036	38	2 x 023U801666	Cp2
SY/SZ680 right suction	S 300 +	S 380	7777032	39	2 x 023U801666	Cp2
SY/SZ760	S 380 +	S 380			2 x 023U801666	

Refer to FRCC.PC.003. "Ordering information & packaging" section for other codes or other connections, or other motor protection version or industrial pack version.

Compressor mounting

Individual compressors must always be mounted using the provided mounting grommets ① and metal sleeves ② that isolate the compressor from the base plate. If this is not done the system will transmit vibration and reduce compressor life. The rubber grommets must be compressed until contact between the flat washer ③ and the steel-mounting sleeve ② is made. A lock washer ④ must be placed under bolt head to avoid untightening.

The required bolt size for the SY/Z240 to 380 compressors is HM10. The minimum required flat washer outside diameter is 27 mm. Mounting bolts must be tightened to a torque of 40 Nm. These bolts and washers are not supplied with the compressor.

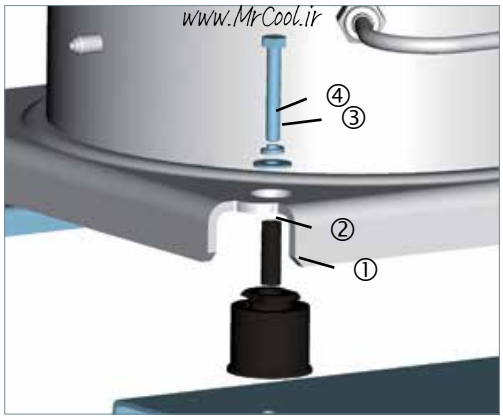

Supplied with the compressor
Not supplied

Oil equalisation connection

An 1/2" oil equalisation line must be connected to the 1/2" flare oil equalisation fitting. Use flare adapter FSA44, code n°023U801666.

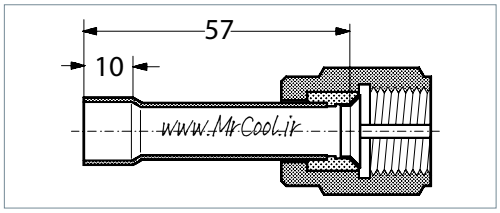

Suction washer

Tandem must be assembled according to the drawings as listed above. Some essential design elements from these drawings that must absolutely be followed are:

- The manifold assembly extending from the common suction connection to each compressor must be symmetrical, which means that they must utilize identical components and lengths.

- All elbows must be of the long radius type.

- The discharge and suction lines from each compressor must have a slope as indicated.

- A suction washer ⑤ must be placed in the S 240 compressor suction, on S 540 tandems as shown below.

- A suction washer must be placed in the S 380 compressor suction, on S 680 tandems as shown below.

The black suction washer Ø38mm is for SY/SZ680 tandem with left suction. The copper colour suction washer Ø39mm is for SY/SZ680 tandem with right suction.

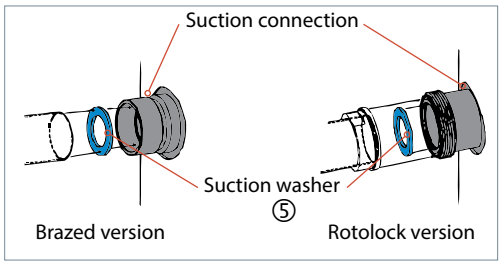

Operation principle

SM/SZ444 and 483 trio use the static system to balance the oil between the compressors. Each of the compressors may run alone to provide proper capacity for part load operation. The system has been designed to ensure a precise pressure balancing between the sump, facilitating the oil equalisation by gravity. The discharge line is shown with three tees, to indicate that both left and right side discharge header are possible.

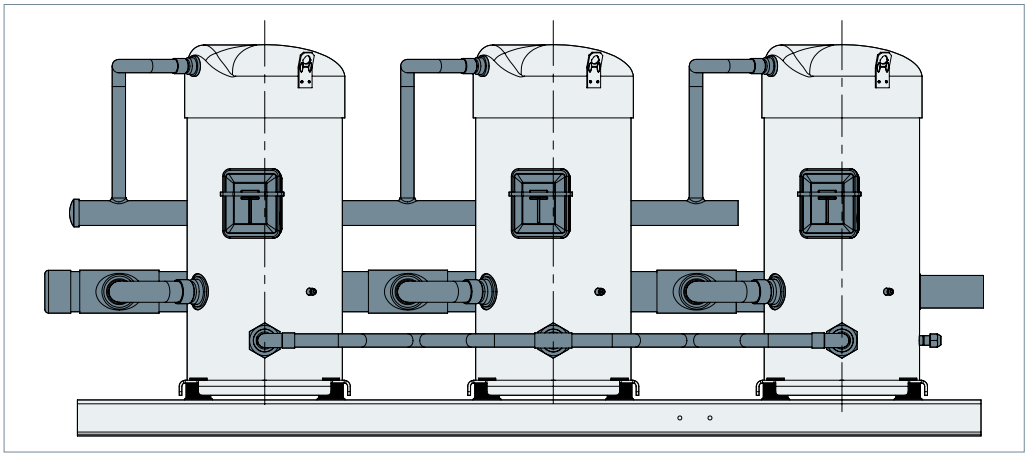

Trio model	Composition	Suction	Discharge	Oil equalisation line	Trio drawing number
SM/SZ444	3 x S148	2"1/8	1"5/8	7/8"	8551150
SM/SZ483	3 x S161	2"1/8	1"5/8	7/8"	8551150

Ordering information

Trio model	Configuration example	Oil equalisation adapter kit
SM/SZ444	3 x SZ148-4VAM	3 x 120Z0164
SM/SZ483	3 x SZ161-4VAM	3 x 120Z0164

Refer to FRCC.PC.003. "Ordering information & packaging" section for other codes or industrial pack version.

Compressor mounting

Individual compressors must always be mounted using the provided mounting grommets ① and metal sleeves ② that isolates the compressor from the base plate. If this is not done the system will transmit vibration and in turn reduce compressor life. The rubber grommets must be compressed until contact between the flat washer ③ and the steel-mounting sleeve ② is made. A lock washer ④ must be placed under bolt head to avoid untightening.

The required bolt size for the SM/SZ084 to 185 compressors is HM8. This bolt must be tightened to a torque of 21 Nm. The bolts and washers are supplied the assembly kit.

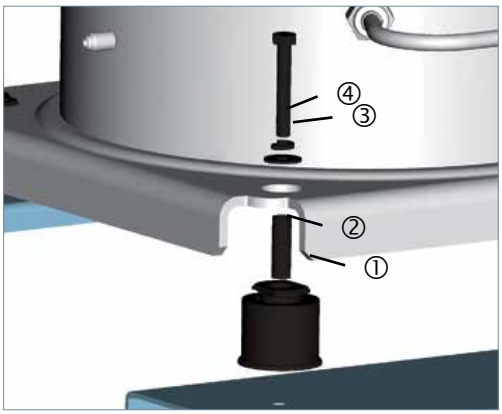

Supplied with the compressor
Not supplied

Oil equalisation connection

For SM/SZ444 and 483, a 7/8" oil equalisation line must be fitted between the 3 oil sight glass fittings. Accessory 120Z0164 is the oil equalisation adapter kit to connect 7/8" tube on 22 mm oil sight glass connection. 3 accessories 120Z0164 are necessary to built a trio assembly.

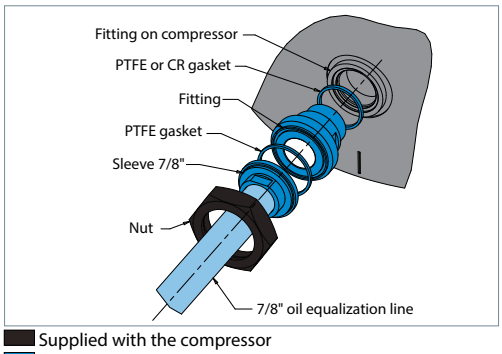

Supplied with the compressor
Included oil equalisation adapter kit
Not supplied

Suction line

Suction line has to be built as follows.

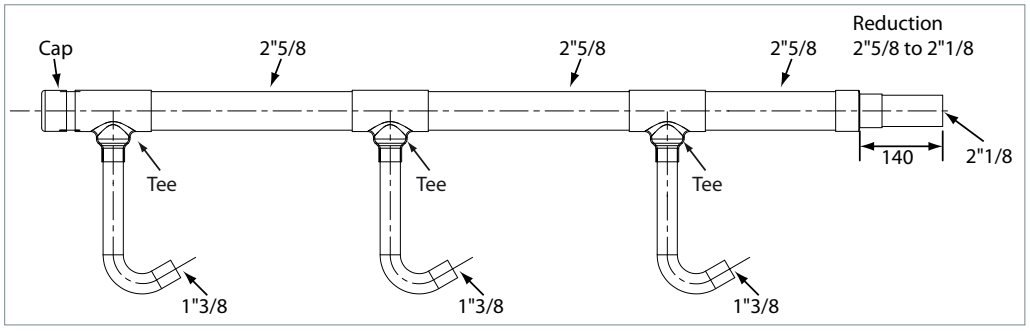

Operation principle

Trio units SM/SZ550 use the dynamic system for oil equalisation, based on preferred oil return to the upstream compressor A.

Oil sump pressure differences are created, so that when all compressors are running sump pressure $p_A > p_B > p_C$, which allows oil transfer from A to B to C.

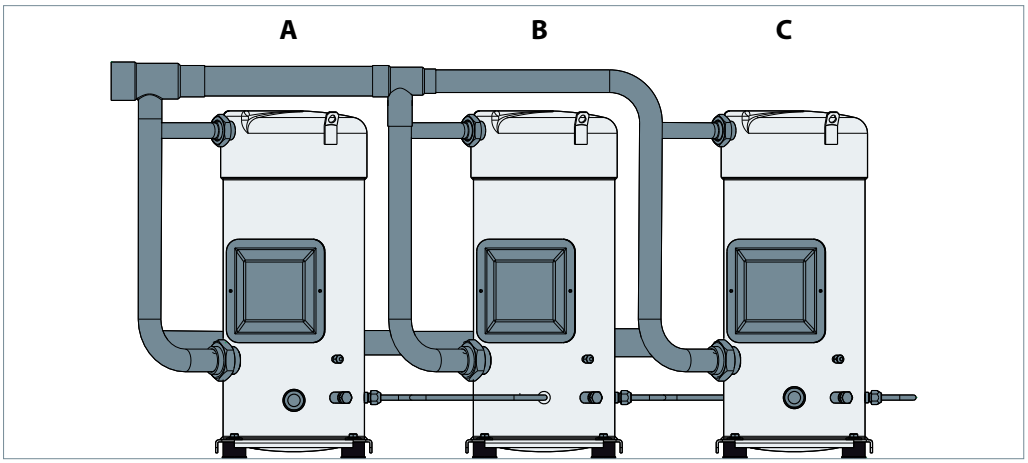

A fixed loading sequence must be respected to ensure reliable operation (see table).

Load	A	B	C
33 %	On	Off	Off
66 %	Off	On	On
100 %	On	On	On

This applies to continuous operation. For transient situations other sequences are possible. For example, when starting the unit at 66 % it is acceptable to start directly C and a few seconds later B. The above loading sequence ensures good oil distribution in the whole application envelope, even when rapid cycling occurs.

Trio model	Composition	Suction	Discharge	Oil equalisation line	Trio drawing number
SM/SZ550	3 x S185	2"5/8	2"1/8	1/2"	8551084* 8551081**

* left suction connection
** right suction connection

Ordering information

Different tandem assembly kits are available:
Kit ① containing Tees, restrictor, sleeves, adapter gasket and oil fittings.
Kit ② containing restrictor, sleeves, adapter gasket and oil fittings.
Kit ③ containing the adapter, gasket, oil fitting.

Trio model	Connection type	Configuration example	Kit ①	Kit ②	Kit ③
SM/SZ550	Brazed	3 x SZ185-4CAM	1 x 7777012	1 x 7777016	1 x 7773112
SM/SZ550	Rotolock	3 x SZ185-4PAM	1 x 7777012	1 x 7777016	1 x 7773112

Refer to FRCC.PC.003. "Ordering information & packaging" section for other codes or industrial pack version.

Compressor mounting

Individual compressors must always be mounted using the provided mounting grommets ① and metal sleeves ② that isolates the compressor from the base plate. If this is not done the system will transmit vibration and reduce compressor life. The rubber grommets must be compressed until contact between the flat washer ③ and the steel-mounting sleeve ② is made. A lock washer ④ must be placed under bolt head to avoid untightening.

The required bolt size for the SM/SZ 084 to 185 compressors is HM8. This bolt must be tightened to a torque of 21 Nm. The bolts and washers are supplied with the compressor.

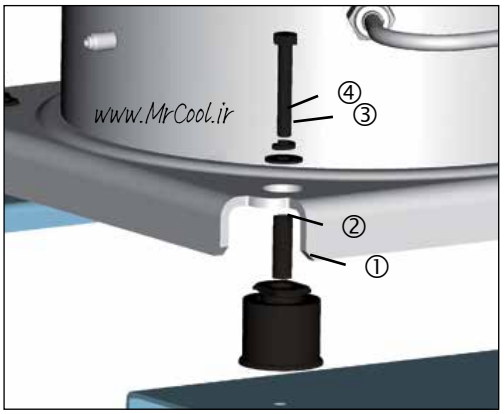

Supplied with the compressor
Not supplied

Oil equalisation connection

For SM/SZ550, a 1/2" oil equalisation line must be fitted between the 3/8" flare oil equalisation fittings and the 22 mm oil sight glass fitting (compressor in the middle).
Accessory 7773112 is the oil equalisation adapter kit containing the required parts as shown below.

One accessory 7773112 is necessary to built a trio equalisation line.
The parts are also available in other kits 7777016 & 7777012.

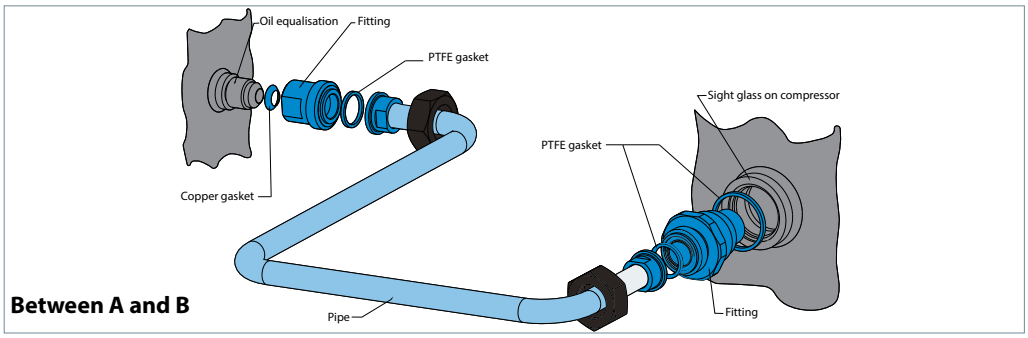

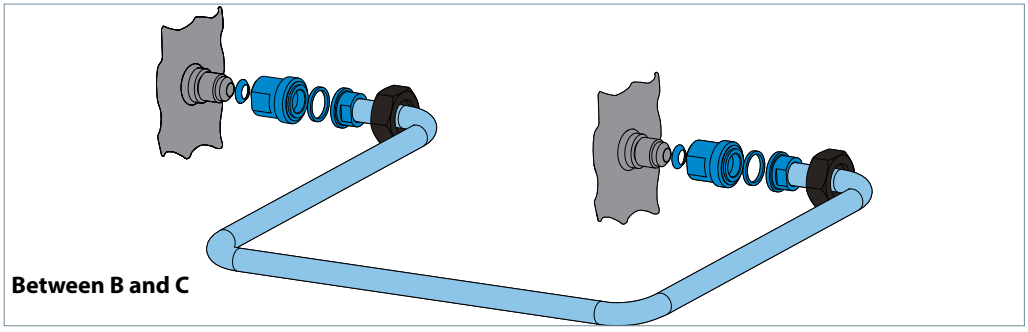

Supplied with the compressor
Included in trio assembly kit
Not supplied

Restrictors assembly

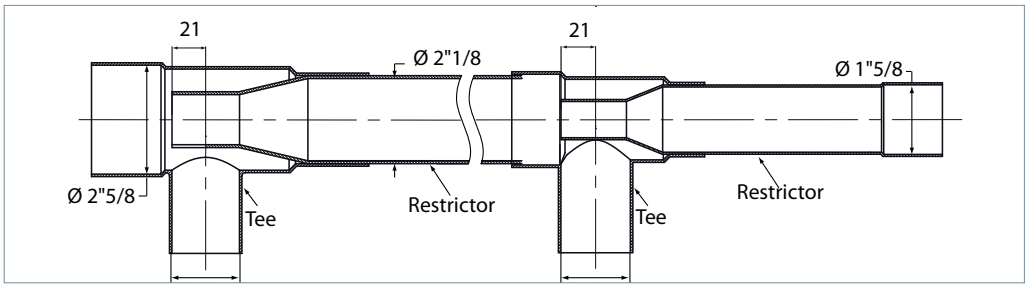

Tees and restrictors are available in kit 7777012. Restrictors only are available in kit 7777016.

Operation principle

SY/SZ720 to SY/SZ1140 trio use the static system to balance the oil between the compressors. Each of the compressors may run alone to provide proper capacity for part load operation. The system has been designed to ensure a precise pressure balancing between the sump, facilitating the oil equalisation by gravity. The discharge line is shown with three tees, to indicate that both left and right side discharge header are possible.

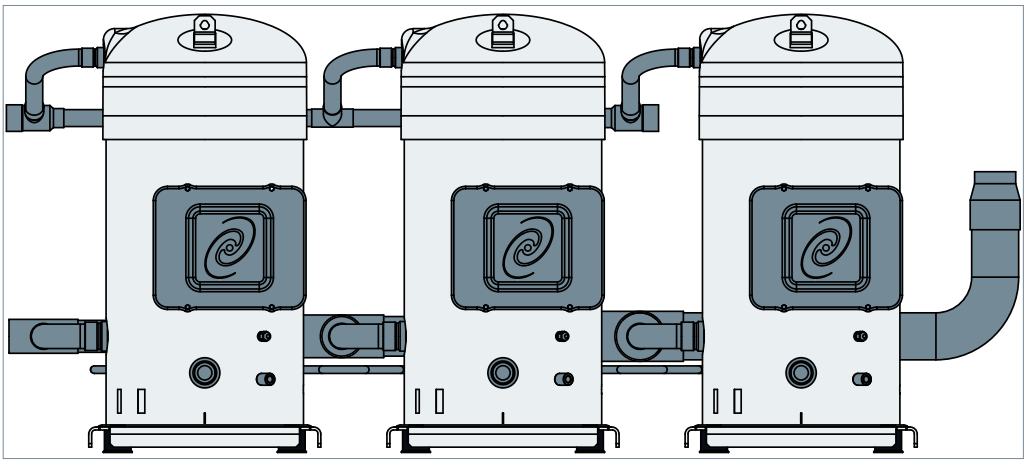

Trio model	Composition	Suction	Discharge	Oil equalisation	Trio drawing number
SY/SZ720	3 x S240	2"5/8	1"3/8	1/2"	8556018* 8556024**
SY/SZ900	3 x S300	2"5/8	1"3/8	1/2"	8556018* 8556024**
SY/SZ1140	S x S380	2"5/8	1"3/8	1/2"	8556145* 8556030**

* Left suction connection

** Right suction connection

Ordering information

Trio model	Configuration example	Flare adapters	Restrictors
SY/SZ720	3 x SZ240A4CBM	6 x 023U801666	
SY/SZ900	3 x SZ300A4CBM	6 x 023U801666	Standard piping and Tee's
SY/SZ1140	3 x SZ380A4CBM	6 x 023U801666	

Order specific compressors equipped with two oil equalisation fittings for trio mounting (example: SZ240A4**C**BM). Contact Danfoss for ordering informations.

Refer to FRCC.PC.003. "Ordering information & packaging" section for other codes or industrial pack version.

Compressor mounting

Individual compressors must always be mounted using the provided mounting grommets ① and metal sleeves ② that isolates the compressor from the base plate. If this is not done the system will transmit vibration and in turn reduce compressor life. The rubber grommets must be compressed until contact between the flat washer ③ and the steel-mounting sleeve ② is made. A lock washer ④ must be placed under bolt head to avoid untightening.

The required bolt size for the SY/SZ240 to 380 compressors is HM10. The minimum required flat washer outside diameter is 27 mm. Mounting bolts must be tightened to a torque of 40Nm. These bolts and washers are not supplied with the compressor.

Supplied with the compressor
Included in trio assembly kit
Not supplied

Oil equalisation connection

For SY/SZ720/900/1140, a 1/2" oil equalisation line must be fitted on 1/2" flare oil equalisation connections. For equalisation of trio SY/SZ720-900-1140 use 6 flare adapters FSA 44: code n° 023U801666.

Order specific compressors equipped with two oil equalisation fittings for trio mounting (example: SZ240A4**C**BM). Contact Danfoss for ordering informations.

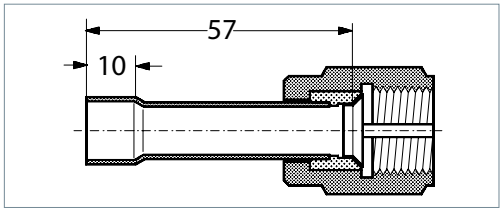

Suction line

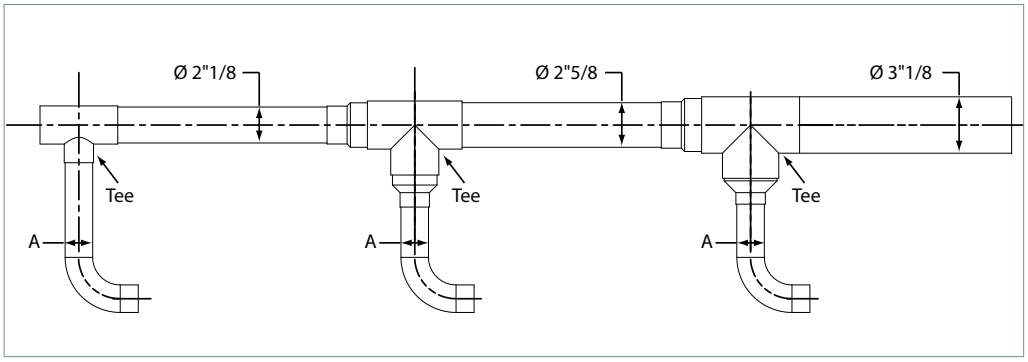

Trio model	SY/SZ720	SY/SZ900	SY/SZ1140
A	1"5/8	1"5/8	2"1/8

Operation principle

Quadro units SM/SZ740 use the dynamic system for oil equalisation, based on preferred oil return to the upstream compressor D.

Oil sump pressure differences are created, so that when all compressors are running sump pressure $p_A > p_B > p_C > p_D$ which allows oil transfer from A to B to C to D.

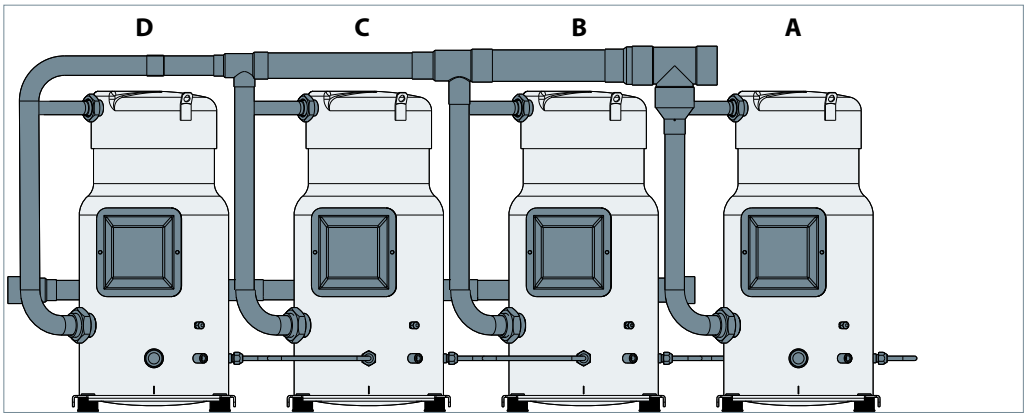

A fixed loading sequences must be respected to ensure reliable operation (see table).

Load	A	B	C	D
25 %	On	Off	Off	Off
50 %	Off	Off	On	On
75 %	Off	On	On	On
100 %	On	On	On	On

This applies to continuous operation. For transient situations other sequences are possible. For example when starting the unit at 50 % it is acceptable to start directly D and a few seconds later C or for 75 % start D, then C, then B. The above loading sequence ensures good oil distribution in the whole application envelope, even when rapid cycling occurs.

Quadro model	Composition	Suction	Discharge	Oil equalisation line	Quadro drawing number
SM/SZ740	4 x S185	3" 1/8	2" 1/8	1/2"	8551078* 8551080**

* Left suction connection

** Right suction connection

Ordering information

Three different assembly kits are available for field assembly:
Kit ① containing a suction oil separator/gas restrictor, discharge header T connector, sleeves, gaskets, oil adapters and oil fittings.
Kit ② containing a suction oil separator/gas restrictor, sleeves, gaskets, oil adapters and oil fittings.
Kit ③ containing gaskets, oil adapters and oil fittings.

Quadro model	Configuration example	Quadro assembly kit code no.		
		Kit ①	Kit ②	Kit ③
SM/SZ 740	4 x S185-4CAI	7777011	7777017	120Z0430

Refer to FRCC.PC.003. "Ordering information & packaging" section for other codes or other connections, or other motor protection version or industrial pack version.

Compressor mounting

Individual compressors must always be mounted using the provided mounting grommets ① and metal sleeves ② that isolates the compressor from the base plate. If this is not done the system will transmit vibration and in turn reduce compressor life. The rubber grommets must be compressed until contact between the flat washer ③ and the steel-mounting sleeve ② is made. A lock washer ④ must be placed under bolt head to avoid untightening.

The required bolt size for the SM/SZ084 to 185 compressors is HM8. This bolt must be tightened to a torque of 21 Nm. The bolts and washers are supplied the assembly kit.

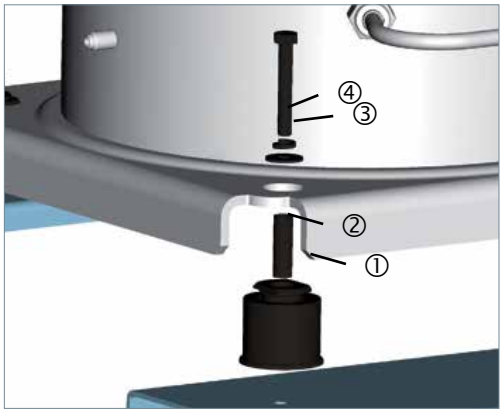

Supplied with the compressor
Not supplied

Oil equalisation connection

For SY/SZ740, 1/2" oil equalisation line is fitted on 3/8" flare oil equalisation connections.

For equalisation of quadro SY/SZ740 use the accessory 120Z0430 as shown below.These parts are also available in kit 7777011 and 7777017.

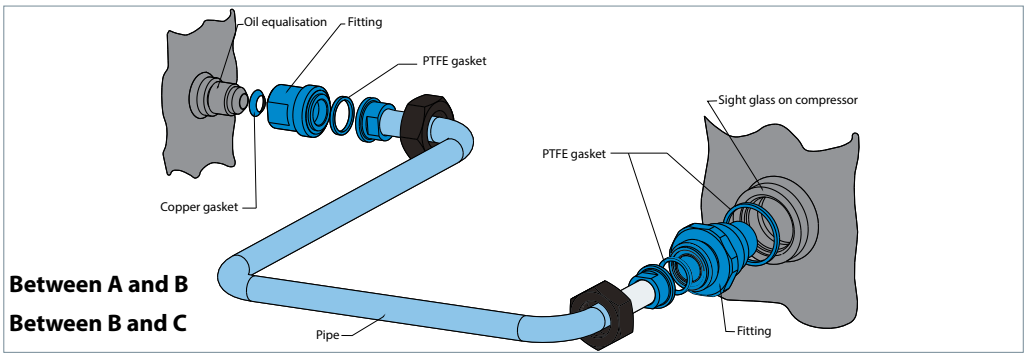

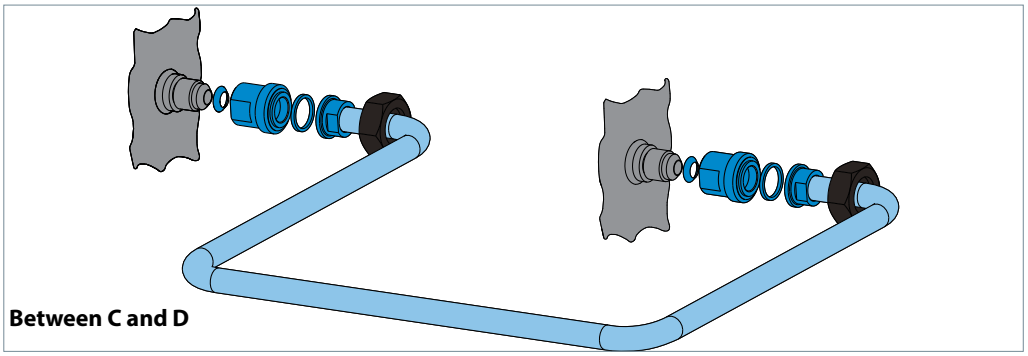

Supplied with the compressor
Included in quadro assembly kit
Not supplied

Restrictor assembly

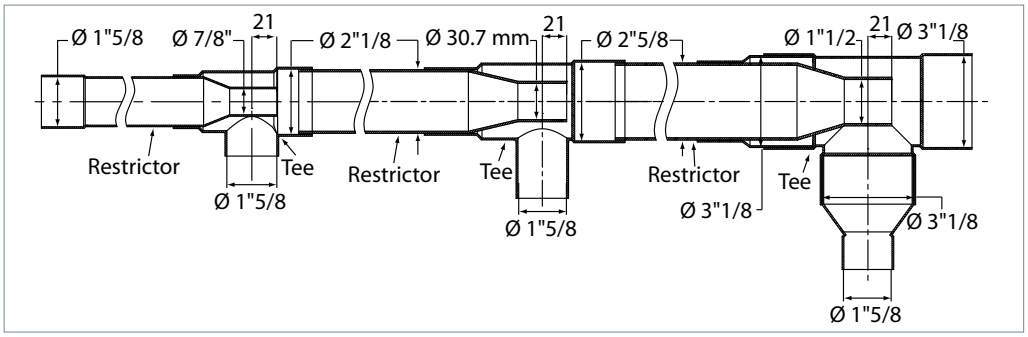

Tees and restrictors are available in kit 7777011. Restrictors only are available in kit 7777017.

	Installation and service procedures for a parallel system are similar to basic system installations. The selection of additional system components for parallel installations follows the basic system	common rules. Please refer to the Application Guidelines for Danfoss scroll compressors (FRCC.PC.003.) for detailed installation and service procedures.
Compressor mounting	A common base frame, rigid enough to support the weight of the compressors, must be used for installation. To reduce transmission of vibrations, rubber mounting grommets are used, either to mount the compressors on the unit frame or to mount the unit frame in the system. It is recommended to install all control and safety devices on an independent frame. These devices should be connected to the common frame using flexible tubing.	Suction and discharge lines must have adequate three dimensional flexibility. For parallel systems the simplest means of acquiring this is by the use of vibration absorbers. For details see compressors mounting for each tandem / trio arrangement.
Tandem, trio & quadro piping design	For each tandem, trio and quadro configuration specific outline drawings are available as indicated on the following pages. These drawings must always be respected. No changes shall be made to the indicated tubing diameter and fitting types.	The oil equalisation line shall be made of 3/8 or 1/2 inch refrigerant grade copper tube and assembled in such a way that it does not extend above the connection height and must be horizontal so as not to trap oil.
Wiring and rotation direction	All compressors in a tandem, trio and quadro unit must be electrically wired individually.	Compressors should run with the correct rotation direction. This can be achieved by having the correct phase sequence on each compressor motor terminal (L1-T1, L2-T2, L3-T3).

Oil level

The oil must be checked before commissioning (visible in the oil sight glass). Check the oil level again after a minimum of 2 hours operation at nominal conditions. In most installations the initial compressor oil charge will be sufficient. In installations with line runs exceeding 20 m or with many oil traps, additional oil may be required. Normally the quantity of oil added should be no more than 2% of the total refrigerant charge (this percentage does not take into account oil contained in accessories such as suction accumulators, liquid receiver, or oil traps). If this amount has already been added and the oil level in the compressors keeps decreasing, the oil return in the installation is insufficient. A piping design checking is required.

During operation, the oil level in the sight glass of the compressors may fluctuate. The oil level can be checked directly after the system has stopped. In this case the level must be at visible in the oil sight glass of all compressors.

On units working 100% load continuously, a compressor oil level might decrease. In order to avoid any loss of oil, regular unit stops might be needed to re equilibrate oil levels in the compressors.

Failure analysis

When one compressor in a parallel system fails, the chance of foreign particles entering other compressors is greatly increased. Therefore a failure analysis must be done quickly to insure further proper running conditions for the overall installation (i.e.: oil analysis).

Oil equalisation connection

Danfoss Commercial Compressors has developed specially adapted oil equalisation systems which ensure proper oil balancing between the compressors.

Hence, Danfoss scroll compressors are equipped with flare connections:

- S 084 to 185: 3/8" flare SAE – tightening torque 50 Nm.
- S 240 to 380: 1/2" flare SAE – tightening torque 65 Nm.

Rotolock adapter sets

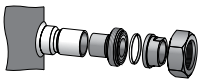

Type	Code n°	Description	Application	Packaging	Pack size
	7765005	Rotolock adapter set (1"3/4 Rotolock, 1"1/8 ODF), (1"1/4 Rotolock, 3/4" ODF)	SM084.090.100 & SZ084.090.100	Multipack	6
	7765006*	Rotolock adapter set (1"3/4 Rotolock, 1"3/8 ODF), (1"1/4 Rotolock, 3/4" ODF)	SM110.112.120.124.147.148.161 & SZ110.120.148.161 &	Multipack	6
	120Z0405	Rotolock adapter set (1"3/4 Rotolock, 1"3/8 ODF), (1"1/4 Rotolock, 7/8" ODF)		Multipack	8
	7765028	Rotolock adapter set, (2-1/4" Rotolock, 1"5/8 ODF), (1"3/4 Rotolock, 1"1/8 ODF)	SM/SY/SZ175.185.240.300 &	Multipack	6
	120Z0317	Flange	SY/Z380	Single pack	1

*: Diameter restrictor

Rotolock adapters

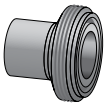

Type	Code n°	Description	Application	Packaging	Pack size
	120Z0366	Rotolock adapter (1"1/4 Rotolock, 3/4" ODF)	Models with 3/4" ODF	Multipack	10
	120Z0367	Rotolock adapter (1"1/4 Rotolock, 7/8" ODF)	Models with 7/8" ODF	Multipack	10
	120Z0364	Rotolock adapter (1"3/4 Rotolock, 1"1/8 ODF)	Models with 1"1/8 ODF	Multipack	10
	120Z0431	Rotolock adapter (1"3/4 Rotolock, 1"3/8 ODF)	Models with 1"3/8 ODF	Multipack	10
	120Z0432	Rotolock adapter (2-1/4" Rotolock, 1"5/8 ODF)	Models with 1"5/8 ODF	Multipack	10

Gaskets and gasket sets

Type	Code n°	Description	Application	Packaging	Pack size
G09	8156131	Gasket, 1"1/4	Models with 1"1/4 rotolock connection	Multipack	10
G09	7956002	Gasket, 1"1/4		Industry pack	50
G07	8156132	Gasket, 1"3/4	Models with 1"3/4 rotolock connection	Multipack	10
G07	7956003	Gasket, 1"3/4		Industry pack	50
G08	8156133	Gasket, 2"1/4	Models with 2"1/4 rotolock connection	Multipack	10
G08	7956004	Gasket, 2"1/4		Industry pack	50
	8156013	Gasket set, 1"1/4, 1"3/4, 2"1/4, OSG gaskets black & white	All rotolock models	Multipack	10

Rotolock angle adapters

Type	Code n°	Description	Application	Packaging	Pack size
C04	8168006	Angle adapter, C04 (1"1/4 Rotolock, 3/4" ODF)	Models with 1"1/4 rotolock connection	Multipack	6
C07	8168008	Angle adapter, C04 (1"3/4 Rotolock, 7/8" ODF)	Models with 1"3/4 rotolock connection	Multipack	6
C02	8168005	Angle adapter, C02 (1"3/4 Rotolock, 1"1/8 ODF)		Multipack	6

Solder sleeves

Type	Code n°	Description	Application	Packaging	Pack size
P04	8153008	Solder sleeve, P04 (1"1/4 Rotolock, 3/4" ODF)	Models with 1"1/4 rotolock connection	Multipack	10
P05	8153012	Rotolock connector, P05 (1"1/4 Rotolock, 7/8" ODF)	Models with 1"1/4 rotolock connection	Multipack	10
P07	8153013	Solder sleeve, P07 (1"3/4 Rotolock, 7/8" ODF)	Models with 1"3/4 rotolock connection	Multipack	10
P02	8153004	Solder sleeve, P02 (1"3/4 Rotolock, 1"1/8 ODF)	Models with 1"3/4 rotolock connection	Multipack	10
P10	8153003	Solder sleeve, P10 (1"3/4 Rotolock, 1"3/8 ODF)	Models with 1"3/4 rotolock connection	Multipack	10
P08	8153005	Solder sleeve, P08 (2-1/4" Rotolock, 1"3/8 ODF)	Models with 2"1/4 rotolock connection	Multipack	10
P03	8153006	Solder sleeve, P03 (2-1/4" Rotolock, 1"5/8 ODF)	Models with 2"1/4 rotolock connection	Multipack	10
P06	8153007	Solder sleeve, P06 (1" Rotolock, 1/2" ODF)	Models with 1/2" oil equalisation line	Multipack	10

Rotolock nuts

Type	Code n°	Description	Application	Packaging	Pack size
	8153123	Rotolock nut, 1"1/4	Models with 1"1/4 rotolock connection	Multipack	10
	8153124	Rotolock nut, 1"3/4	Models with 1"3/4 rotolock connection	Multipack	10
	8153126	Rotolock nut, 2"1/4	Models with 2"1/4 rotolock connection	Multipack	10

Rotolock service valves and valve sets (without gasket)

Type	Code n°	Description	Application	Packaging	Pack size
V04	8168029	Rotolock valve, V04 (1"1/4 Rotolock, 3/4" ODF)	Models with 1"1/4 rotolock connection	Multipack	6
V04	7968006	Rotolock valve, V04 (1"1/4 Rotolock, 3/4" ODF)		Industry pack	42
V05	8168030	Rotolock valve, V05 (1"1/4 Rotolock, 7/8" ODF)	Models with 1"1/4 rotolock connection	Multipack	6
V05	7968007	Rotolock valve, V05 (1"1/4 Rotolock, 7/8" ODF)		Industry pack	36
V02	8168028	Rotolock valve, V02 (1"3/4 Rotolock, 1"1/8 ODF)	Models with 1"3/4 rotolock connection	Multipack	6
V02	7968009	Rotolock valve, V02 (1"3/4 Rotolock, 1"1/8 ODF)		Industry pack	24
V07	8168032	Rotolock valve, V07 (1"3/4 Rotolock, 7/8" ODF)	Models with 1"3/4 rotolock connection	Multipack	6
V07	7968008	Rotolock valve, V07 (1"3/4 Rotolock, 7/8" ODF)		Industry pack	36
V10	8168022	Rotolock valve, V10 (1"3/4 Rotolock, 1"3/8 ODF)	Models with 1"3/4 rotolock connection	Single pack	1
V03	8168026	Rotolock valve, V03 (2-1/4" Rotolock, 1"5/8 ODF)	Models with 2"1/4 rotolock connection	Multipack	6
V03	7968011	Rotolock valve, V03 (2-1/4" Rotolock, 1"5/8 ODF)		Industry pack	18
V08	8168025	Rotolock valve, V08 (2-1/4" Rotolock, 1"3/8 ODF)	Models with 2"1/4 rotolock connection	Multipack	6
V08	7968010	Rotolock valve, V08 (2-1/4" Rotolock, 1"3/8 ODF)		Industry pack	18
V12	120Z0320	Flange type valve, V12 (Flange ~ 2"1/8)	SY/SZ380	Single pack	1
V02-V04	7703009	Valve set, V02 (1"3/4~1"1/8), V04 (1"1/4~3/4")	SM/SZ084-125	Multipack	6
V10-V05	7703392	Valve set, V10 (1"3/4~1"3/8), V05 (1"1/4~7/8")	SM110.112.120.124.147.148.161 & SZ110.120.148.161	Multipack	6
V03-V02	7703383	Valve set, V03 (2-1/4"~1"5/8), V02 (1"3/4~1"1/8)	SM/SY/SZ175.185.240.300.380	Multipack	4
V08-V07	7703010*	Valve set, V08 (2-1/4"~1"3/8), V07 (1"3/4~7/8")	SM/SZ175.185	Multipack	6
V12-V10	120Z0316	Valve set, V12 (flange ~ 2"1/8), V10(1"3/4~1"3/8)	SY/Z380	Single pack	1

* Diameter restriction

Crankcase heaters

Type	Code n°	Description	Application	Packaging	Pack size
	120Z0466	Belt type crankcase heater, 65 W, 460 V, CE mark, UL	SM/SZ084-161	Multipack	6
	7773109	Belt type crankcase heater, 65 W, 110 V, CE mark, UL		Multipack	6
	7973001	Belt type crankcase heater, 65 W, 110 V, CE mark, UL		Industry pack	50
	7773107	Belt type crankcase heater, 65 W, 230 V, CE mark, UL		Multipack	6
	7973002	Belt type crankcase heater, 65 W, 230 V, CE mark, UL		Industry pack	50
	7773117	Belt type crankcase heater, 65 W, 400 V, CE mark, UL		Multipack	6
	120Z0039	Belt type crankcase heater, 65 W, 400 V, CE mark, UL		Multipack	8
	120Z0467	Belt type crankcase heater, 65 W, 575 V, CE mark, UL		Multipack	6
	7773110	Belt type crankcase heater, 75 W, 110 V, CE mark, UL	SM/SZ175-185	Multipack	6
	7773108	Belt type crankcase heater, 75 W, 230 V, CE mark, UL		Multipack	6
	7973005	Belt type crankcase heater, 75 W, 230 V, CE mark, UL		Industry pack	50
	7773118	Belt type crankcase heater, 75 W, 400 V, CE mark, UL		Multipack	6
	120Z0464	Belt type crankcase heater, 75 W, 460 V, CE mark, UL		Multipack	6
	120Z0465	Belt type crankcase heater, 75 W, 575 V, CE mark, UL		Multipack	6
	7773121	Belt type crankcase heater, 130 W, 110 V, CE mark, UL	SY/SZ240-380	Multipack	4
	7773122	Belt type crankcase heater, 130 W, 230 V, CE mark, UL		Multipack	4
	7973007	Belt type crankcase heater, 130 W, 230 V, CE mark, UL		Industry pack	50
	7773123	Belt type crankcase heater, 130 W, 400 V, CE mark, UL		Multipack	4

Surface sump heaters

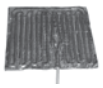

Type	Code n°	Description	Application	Packaging	Pack size
	120Z0361	Surface sump heater + Bottom insulation, 48 W, 24 V, CE, UL	SM/SZ084-161 excluding SM112.124.147	Multipack	6
	120Z0380	Surface sump heater + Bottom insulation, 48 W, 230 V, CE, UL		Multipack	6
	120Z0381	Surface sump heater + Bottom insulation, 48 W, 400 V, CE, UL		Multipack	6
	120Z0382	Surface sump heater + Bottom insulation, 48 W, 460 V, CE, UL		Multipack	6
	120Z0383	Surface sump heater + Bottom insulation, 48 W, 575 V, CE, UL		Multipack	6
	120Z0388	Surface sump heater, 80 W, 24 V, CE, UL	SM112.124.147	Multipack	8
	120Z0389	Surface sump heater, 80 W, 230 V, CE, UL		Multipack	8
	120Z0390	Surface sump heater, 80 W, 400 V, CE, UL		Multipack	8
	120Z0391	Surface sump heater, 80 W, 460 V, CE, UL		Multipack	8
	120Z0402	Surface sump heater, 80 W, 575 V, CE, UL		Multipack	8
	120Z0360	Surface sump heater + Bottom insulation, 56 W, 24 V, CE, UL	SM/SZ175.185, SY185	Multipack	6
	120Z0376	Surface sump heater + Bottom insulation, 56 W, 230 V, CE , UL		Multipack	6
	120Z0377	Surface sump heater + Bottom insulation, 56 W, 400 V, CE, UL		Multipack	6
	120Z0378	Surface sump heater + Bottom insulation, 56 W, 460 V, CE, UL		Multipack	6
	120Z0379	Surface sump heater + Bottom insulation, 56 W, 575 V, CE, UL		Multipack	6
	120Z0359	Surface sump heater + Bottom insulation, 80 W, 24 V, CE, UL	SY/SZ240-380	Multipack	4
	120Z0372	Surface sump heater + Bottom insulation, 80 W, 230 V, CE, UL		Multipack	4
	120Z0373	Surface sump heater + Bottom insulation, 80 W, 400 V, CE, UL		Multipack	4
	120Z0374	Surface sump heater + Bottom insulation, 80 W, 460 V, CE, UL		Multipack	4
	120Z0375	Surface sump heater + Bottom insulation, 80 W, 575 V, CE, UL		Multipack	4

3 phase soft start equipment

Type	Code n°	Description	Application	Packaging	Pack size
MCI15C	7705006	Electronic soft start kit, MCI 15 C	SM/SZ084-110	Single pack	1
MCI25C	7705007	Electronic soft start kit, MCI 25 C	SM/SZ120-185	Single pack	1
MCI50CM	037N0401	Electronic soft start kit, MCI 50 CM	SY/SZ240-380	Single pack	1

Motor protection modules

Type	Code n°	Description	Application	Packaging	Pack size
	120Z0584	Electronic motor protection module, 24 V AC	SM/SY/SZ185 to 380	Single pack	1
	120Z0585	Electronic motor protection module, 110/240 V	SM/SY/SZ185 to 380	Single pack	1

Discharge thermostat kits

Type	Code n°	Description	Application	Packaging	Pack size
	7750009	Discharge thermostat kit	All models	Multipack	10
	7973008	Discharge thermostat kit	All models	Industry pack	50

Suction header restrictors for tandem

Type	Code n°	www.MrCool.ir Description	Application	Packaging	Pack size
	7765012	Suction header restrictor	SM/SZ170.180.200	Single pack	1
	120Z0322	Suction header restrictor	SM/SZ170.180.200	Industry pack	50
	7765025	Suction header restrictor	SM/SZ220.242.268.271.281.296.322	Single pack	1
	120Z0324	Suction header restrictor	SM/SZ220.242.268.271.281.296.322	Industry pack	50
	7765013	Suction header restrictor	SM/SZ350.370	Single pack	1
	120Z0323	Suction header restrictor	SM/SZ350.370	Industry pack	50
	7765027	Suction header restrictor	SZ425.485	Single pack	1

Suction washers for tandem

Type	Code n°	Description	Application	Packaging	Pack size
	7777023	Suction washer	SY/SZ540	Single pack	1
	7777036	Suction washer	SY/SZ680 with left suction	Single pack	1

Tandem kits including suction header restrictor and suction & discharge tees

Type	Code n°	Description	Application	Packaging	Pack size
	7703251	Restrictor + suction/discharge Tees	SM/SZ170.180.200	Single pack	1
	7703384	Restrictor + suction/discharge Tees	SM/SZ220.242	Single pack	1
	7703390	Restrictor + suction/discharge Tees	SM/SZ268.271.281.296.322	Single pack	1
	7703371	Restrictor + suction/discharge Tees	SM/SZ350.370	Single pack	1

Tandem kits including suction washer, rigid spacers and oil connection sleeves

Type	Code n°	Description	Application	Packaging	Pack size
	7777044	Suction washer, rigid spacer, sleeve for oil connect	SM248	Single pack	1
	7777050	Suction washer, rigid spacer, sleeve for oil connect	SM272	Single pack	1
	7777054	Suction washer, rigid spacer, sleeve for oil connect	SM294	Single pack	1

Tandem mounting kits

Type	Code n°	Description	Application	Packaging	Pack size
	8156003	Mounting kit for 1 scroll tandem, including 4 rubber grommets	SM/SZ350 - 370 Tandem & MS Tandem	Single pack	1
	7777045	Mounting kit for 1 scroll tandem, including 4 rigid grommets, 4 sleeves, 4 bolts, 4 washers	SY/SZ240-300-380 in parallel installation	Single pack	1

Trio kits

Type	Code n°	Description	Application	Packaging	Pack size
	7777012	Restrictors, Tees, sleeves, gaskets & oil fittings for trio mounting (copper pipes not included)	3 x SM/SZ185	Single pack	1
	7777016	Restrictors, sleeves, gaskets & oil fittings for trio mounting (copper pipes & Tees not included)	3 x SM/SZ185	Single pack	1

Quadro kits

Type	Code n°	Description	Application	Packaging	Pack size
	7777011	Restrictors, Tees, sleeves, gaskets & oil fittings for quadro mounting (copper pipes not included)	4 x SM/SZ185	Single pack	1
	7777017	Restrictors, sleeves, gaskets & oil fittings for quadro mounting (copper pipes & Tees not included)	4 x SM/SZ185	Single pack	1

Oil equalisation adapters

Type	Code n°	Description	Application	Packaging	Pack size
	120Z0164	Oil equalisation adapter. To connect 7/8" tube on 22 mm oil sight glass connection. Includes 1 adapter 22 mm to 7/8", 2 gaskets.	SM, SY, SZ	Single pack	1
	120Z0165	Oil equalisation adapter. To connect 1/2" tube on 22 mm oil sight glass connection. Includes 1 adapter 22 mm to 1/2", 2 gaskets.	SM, SY, SZ	Single pack	1
	7773112	Oil equalisation adapter kit for trio mounting. Includes oil fittings, gaskets & adapters (copper pipes not included)	3 x SM/SZ185 4 x SM/SZ185	Single pack	1
	120Z0430	Oil fittings & adapters for quadro mounting (copper pipes not included)	4 x SM/SZ185	Single pack	1

Acoustic hoods

Type	Code n°	Description	Application	Packaging	Pack size
	7755011	Acoustic hood for scroll compressor	SM/SZ084.090.100	Single pack	1
	7755010	Acoustic hood for scroll compressor	SM/SZ110.120	Single pack	1
	120Z0035	Acoustic hood for scroll compressor	SM112.124.147 (except SM147-3)	Single pack	1
	120Z0135	Acoustic hood for scroll compressor	SM147-3	Single pack	1
	7755017	Acoustic hood for scroll compressor	SM/SZ148.161 (except SM/SZ148-3.161-3)	Single pack	1
	7755007	Acoustic hood for scroll compressor	SM/SZ175.185	Single pack	1
	7755016	Acoustic hood for scroll compressor	SY/SZ240.300	Single pack	1
	7755022	Acoustic hood for scroll compressor	SY/SZ380	Single pack	1
	120Z0355	Bottom insulation for scroll compressor	SM/Z240.300.380	Single pack	1

Mounting kits

Type	Code n°	Description	Application	Packaging	Pack size
	8156138	Mounting kit for 1 scroll compressor including 4 grommets, 4 sleeves, 4 bolts, 4 washers	SM/SZ084-185 (excluding SM112.124.147)	Single pack	1
	120Z0066	Mounting kit for 1 scroll compressor including 4 grommets, 4 sleeves, 4 bolts, 4 washers	SM112-124-147	Single pack	1
	8156147	Mounting kit for 1 scroll compressor including 4 grommets, 4 sleeves, 4 bolts, 4 washers, 2 rotolock nuts, 2 solder sleeves, 2 gaskets	SM/SZ148-185	Single pack	1
	8156144	Mounting kit for 1 scroll compressor including 4 grommets, 4 sleeves	SY/SZ240-300-380	Single pack	1
	8156007	Mounting kit for 4 cylinder compressor & MS, including 4 grommets, 4 bolts	MS/MSE/MSZ175.185	Single pack	1

Terminal boxes, covers & T-block connectors

Type	Code n°	Description	Application	Packaging	Pack size
	8173230	T block connector 52 x 57 mm	SM084.090.100.110.112.120.124.147.148*.161* & SZ084.090.100.110.120.148*.161*	Multipack	10
	8156135	Service kit for terminal box 96 x 115 mm, including 1 cover, 1 clamp	SM084.090.100.110.112.120.124.147.148*.161* & SZ084.090.100.110.120.148*.161*	Multipack	10
	8173021	T block connector 60 x 75 mm	SM148-3.161-3.175.185 & SY240*.300*.380 & SZ175.185.240*.300*.380	Multipack	10
	8156139	Terminal box 186 x 198 mm, incl cover	SM/SZ148-3.161-3.175.185	Single pack	1
	120Z0413	Terminal box cover	SM147-3	Single pack	1
	8173331	T block connector 80 x 80 mm	SY/Z240-3.300-3	Multipack	10
	120Z0458	Terminal box 210 x 190 incl. cover	SY/SZ240.300.380	Single pack	1
	120Z0462	Terminal box 210 x 190 incl. cover and module wiring for 258 x 208 terminal box replacement	SY/SZ240.300.380 SM/SZ185 with electronic module	Single pack	1

* except code 3

Lubricants / oils

Type	Code n°	Description	Application	Packaging	Pack size
160SZ	7754023	POE lubricant, 160SZ, 1 litre can	SZ with R407C, R134a, R404A, R513A	Multipack	12
160SZ	120Z0571	POE lubricant, 160SZ, 2.5 litre can	SZ with R407C, R134a, R404A, R513A	Multipack	4
320SZ	7754121	POE lubricant, 320SZ, 1 litre can	SY with R22	Multipack	12
320SZ	120Z0572	POE lubricant, 320SZ, 2.5 litre can	SY with R22	Multipack	4
160P	7754001	Mineral oil, 160P, 2 litre can	SM with R22	Multipack	8
160P	7754002	Mineral oil, 160P, 5 litre can	SM with R22	Multipack	4

Miscellaneous

Type	Code n°	Description	Application	Packaging	Pack size
	8156019	Oil sight glass with gaskets (black & white)	SM, SY, SZ	Multipack	4
	8156129	Gasket for oil sight glass, 1"1/8 (white teflon)	SM, SY, SZ	Multipack	10
	8154001	Danfoss CC blue spray paint	SM, SY, SZ	Single pack	1
	8156145	Gasket for oil sight glass (black chloroprene)	Custom products	Multipack	10

ENGINEERING
TOMORROW

Danfoss Commercial Compressors

is a worldwide manufacturer of compressors and condensing units for refrigeration and HVAC applications. With a wide range of high quality and innovative products we help your company to find the best possible energy efficient solution that respects the environment and reduces total life cycle costs.

We have 40 years of experience within the development of hermetic compressors which has brought us amongst the global leaders in our business, and positioned us as distinct variable speed technology specialists. Today we operate from engineering and manufacturing facilities spanning across three continents.

Danfoss Turbocor Compressors

Danfoss Inverter Scrolls

Danfoss Scrolls

Danfoss Optyma Condensing Units

Danfoss Maneurop Reciprocating Compressors

Danfoss Light Commercial Refrigeration Compressors

Our products can be found in a variety of applications such as rooftops, chillers, residential air conditioners, heatpumps, coldrooms, supermarkets, milk tank cooling and industrial cooling processes.

http://cc.danfoss.com

Danfoss Commercial Compressors, BP 331, 01603 Trévoux Cedex, France | +334 74 00 28 29

member of:
ASERCOM
www.asercom.org

AB230086439211en-000801